In line redni centrifugalni ventilatori
In line centrifugal fans

7

LINE-METAL str. 2.7

Centrifugalni ventilatori kružnog toka transporta vazduha
Round duct backward bladed centrifugal fans

ERM-EX str. 7.7

Radiaksialni ventilatori povecanog stepena sigurnosti
"Increased safety" mixed flow fans

SS-BOX str. 9.7

Akustično centrifugalni ventilatori unazad zakrivljenih lopatica
Acoustic backward bladed centrifugal fans

AxB str. 12.7

Centrifugalni ventilator sa unapred za krivljenim lopaticama za četvorougaone kanalne sisteme
Rectangular duct foreward bladed centrifugal fans

INDICE/IN

Krovni centrifugalni ventilatori
CENTRIFUGAL ROOF FANS — SEK. 1

Krovni aksijalni ventilatori
AXIAL ROOF FANS — SEK. 2

Ventilatori sa ramom za usmeravanje vazduha
PLATE MOUNTED AND RING AXIAL FANS — SEK. 3

Cevni ventilatori
DUCTED AXIAL FANS — SEK. 4

Centrifugalni ventilatori malih dimenzija sa unapred zakrivljenim lopaticama i centrifugalni ventilatori izrađeni od livenog aluminijuma
SMALL SIZE FORWARD CURVED BLADE AND RADIAL CENTRIFUGAL FANS IN ALUMINIUM — SEK. 5

Centrifugalni ventilatori sa unaza zakrivljenim lopaticama
BACKWARD CURVED BLADE CENTRIFUGAL FANS FOR CLEAN AIR — SEK. 6

In line – redni centrifugalni ventilatori
IN LINE CENTRIFUGAL FANS — SEK. 7

Box ventilatori na direktan pogon sa dva otvora
DIRECT DRIVE DOUBLE INLET BOX FANS — SEK. 8

Centrifugalni box ventilatori i ventilatori sa duplim otvorom na remeni pogon
CENTRIFUGAL BOX FANS AND DOUBLE INLET BELT DRIVEN FANS — SEK. 9

Antikorozivni ventilatori
ANTICORROSIVE FANS — SEK. 10

Ventilatori za odstranjivanje dima
SMOKE EXTRACT FANS — SEK. 11

Regulatori brzine obrtaja
SPEED REGULATORS — SEK. 12

Akustično linijski centrifugalni ventilatori i Rekuperator toplote
IN LINE ACOUSTIC CENTRIFUGAL FANS AND HEAT RECUPERATOR — SEK. 13

LINE-METAL

Centrifugalni ventilatori kružnog toka transporta vazduha
Round duct backward bladed centrifugal fans

OSNOVNI PODACI :

LINE_METAL je serija centrifugalnih ventilatora sa osobinama tipičnih za aksijalne ventilatore, što znači da se protok odvija na istoj osovini.
Ove karakteristike – ograničena dimenzija , veličina otvora doprinose lakoj ugradnji. Nizak nivo buke i srednji nivo radnog pritiska transporta vazduha čine ga idealnim za kućnu i industrijsku upotrebu. Zahvaljujući kompaktnom dizajnu može se ugraditi u bilo koji deo cevi – kanala, neposredno u ventilacioni kanal. Pogodni su za pogon čistog vazduha temperature do maksimalnih 60 °C.

KONSTRUKCIJA :

- Kućište je izrađeno od galvanizovanog čelika, zaštićeno Epoxy smolom - model 355 A i 355 B .
- Monofazni el. motor , IP 44 , klasa B, sa termo zaštitom, ugradiv regulator brzine (prikazan u katalogu).
- Unazad zakrivljene lopatice visoke produktivnosti i niskog nivoa buke.
- Usmerenost protoka vazduha za što veću produktivnost.
- Eksterna el. konekcija je obložena Techno- polymer- om unutar kutije, što znači da je otporna na spoljašnje atmosferske uticaje- odnosno uređaj poseduje IP 54 zaštitu.

DELOVI :

- Regulator brzine
- Žaluzine
- Nosač kućišta
- Zaštitna mreža (rešetka)
- Cevna stega
- Prigušivač

GENERAL DESCRIPTION

The LINE-METAL is a series of centrifugal fans with the advantage, typical of axial fans, to convey air on the same axis of the impeller. This characteristic, the limited dimensions and the standardized inlet and outlet sizes grant a particularly easy installation. The low noise level and the medium pressure head make them ideal for industrial and residential installations, in extracting hoods and small exhausting plants, since they can be installed in any point along the duct, or to the duct ends, either in intake or exhaust.
They are suitable to convey clean air upto a maximum temperature of 60°C.

CONSTRUCTION

- *Casing in galvanized steel sheet, Epoxy paint for model 355 A and 355 B.*
- *Single-phase electric motor, IP44, class B, with thermal protection, suitable for speed regulation (using the suitable speed regulators shown in this catalogue).*
- *Backward bladed impeller with high efficiency and low noise level.*
- *Air stream rectifiers, for improved efficiency.*
- *External electric connections enclosed in a terminal box in self-extinguishing techno-polymer, resisting to atmospheric agents with IP54 protection degree.*

ACCESSORIES

- *Speed controllers.*
- *Shutters.*
- *Fixing brackets.*
- *Protection guard.*
- *Duct clamps.*
- *Silencers.*

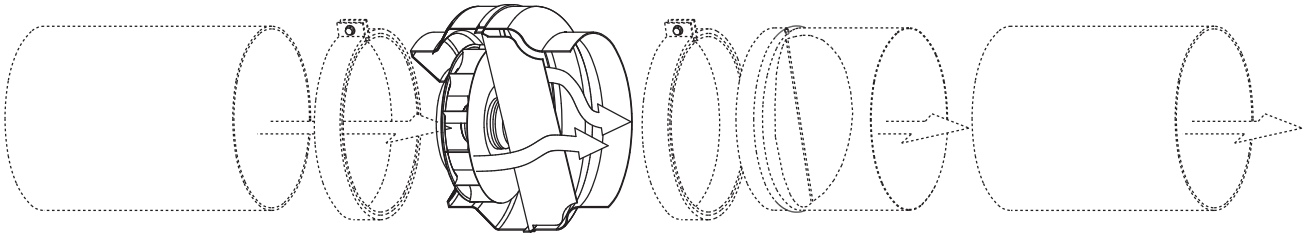

Frekvencija 50 Hz - Temperatura vazduha 15°C – Barometarski pritisak760 mm Hg – Specifična težina vazduha1,22 Kg/m3
Frequency 50Hz – Air temperature 15°C – Barometric pressure 760 mm Hg – Air specific weight 1,22 Kg/m3

LINE-METAL 100

Tip Type	Model Model	U	r.p.m.	Pm (kW)	In max (A)	IP/CL	Reg.
LINE-METAL	100 A	M	1990	0,064	0,3	44/B	RVN o RVS
LINE-METAL	100 B	M	2530	0,064	0,3	44/B	RVN o RVS

Tip Type	Mod.	Lp dB(A)	Lw dB (A) u oktavi spektruma (Hz) "in octave spectrum (Hz)								
			Tot.	63	125	250	500	1k	2k	4k	8k
LINE-METAL	100 A	40	43	/	30	31	32	37	36	35	31
LINE-METAL	100 B	47	50	/	35	37	38	43	41	42	36

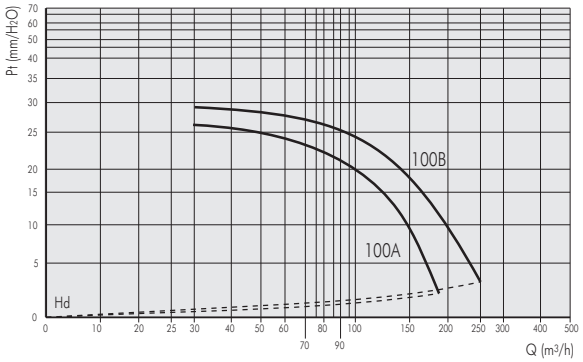

LINE-METAL 125

Tip Type	Model Model	U	r.p.m.	Pm (kW)	In max (A)	IP/CL	Reg.
LINE-METAL	125 A	M	1700	0,07	0,34	44/B	RVN o RVS
LINE-METAL	125 B	M	2400	0,07	0,3	44/B	RVN o RVS

Tip Type	Mod.	Lp dB(A)	Lw dB (A) u oktavi spektruma (Hz) "in octave spectrum (Hz)								
			Tot.	63	125	250	500	1k	2k	4k	8k
LINE-METAL	125 A	39	42	/	33	30	31	36	34	32	30
LINE-METAL	125 B	50	54	/	36	38	39	43	41	43	38

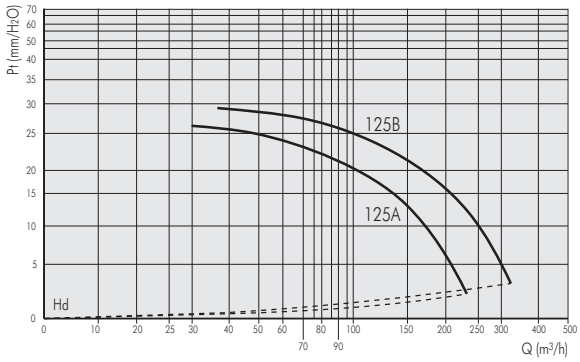

SEK. 7

LINE-METAL 150

Tip Type	Model Model	U	r.p.m.	Pm (kW)	In max (A)	IP/CL	Reg.
LINE-METAL	150 A	M	2470	0,064	0,30	44/B	RVN o RVS
LINE-METAL	150 B	M	2400	0,078	0,40	44/B	RVN o RVS

Tip Type	Mod.	Lp dB(A)	Lw dB (A) u oktavi spektruma (Hz) "in octave spectrum (Hz)								
			Tot.	63	125	250	500	1k	2k	4k	8k
LINE-METAL	150 A	52	54	/	32	39	41	44	48	43	36
LINE-METAL	150 B	53	60	/	39	41	47	51	50	51	40

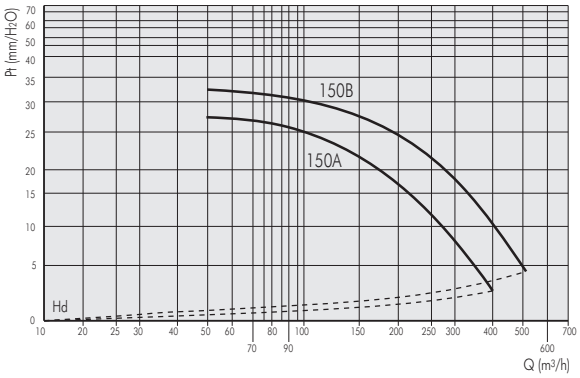

LINE-METAL 160

Tip Type	Model Model	U	r.p.m.	Pm (kW)	In max (A)	IP/CL	Reg.
LINE-METAL	160 A	M	2400	0,07	0,3	44/B	RVN o RVS
LINE-METAL	160 B	M	2550	0,11	0,5	44/B	RVN o RVS

Tip Type	Mod.	Lp dB(A)	Lw dB (A) u oktavi spektruma (Hz) "in octave spectrum (Hz)								
			Tot.	63	125	250	500	1k	2k	4k	8k
LINE-METAL	160 A	51	52	/	31	37	39	43	45	41	35
LINE-METAL	160 B	53	57	/	38	41	46	51	49	50	38

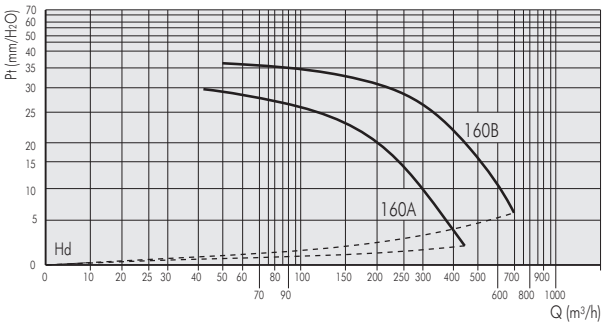

Frekvencija 50 Hz - Temperatura vazduha 15°C – Barometarski pritisak760 mm Hg – Specifična težina vazduha1,22 Kg/m3
Frequency 50Hz – Air temperature 15°C – Barometric pressure 760 mm Hg – Air specific weight 1,22 Kg/m3

LINE-METAL 200

Tip Type	Model Model	U	r.p.m.	Pm (kW)	In max (A)	IP/CL	Reg.
LINE-METAL	200 A	M	2450	0,08	0,4	44/B	RVN o RVS
LINE-METAL	200 B	M	2550	0,15	0,7	44/B	RVN o RVM

Tip Type	Mod.	Lp dB(A)	Lw dB (A) u oktavi spektruma (Hz) "in octave spectrum (Hz)								
			Tot.	63	125	250	500	1k	2k	4k	8k
LINE-METAL	200 A	52	55	/	35	41	44	49	47	45	34
LINE-METAL	200 B	53	56	/	43	42	45	50	49	48	40

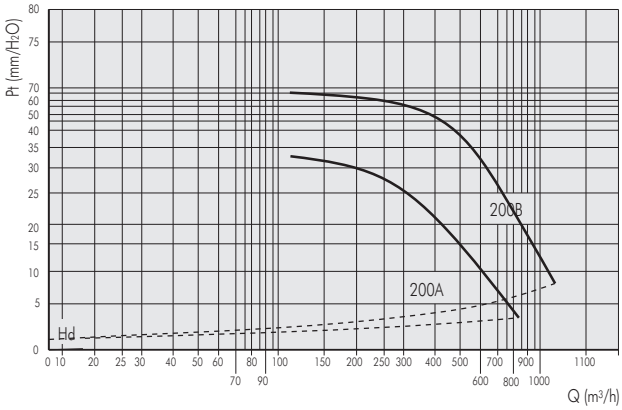

LINE-METAL 250

Tip Type	Model Model	U	r.p.m.	Pm (kW)	In max (A)	IP/CL	Reg.
LINE-METAL	250	M	2550	0,18	0,78	44/B	RVN o RVM

Tip Type	Mod.	Lp dB(A)	Lw dB (A) u oktavi spektruma (Hz) "in octave spectrum (Hz)								
			Tot.	63	125	250	500	1k	2k	4k	8k
LINE-METAL	250	55	58	/	39	44	47	52	51	49	41

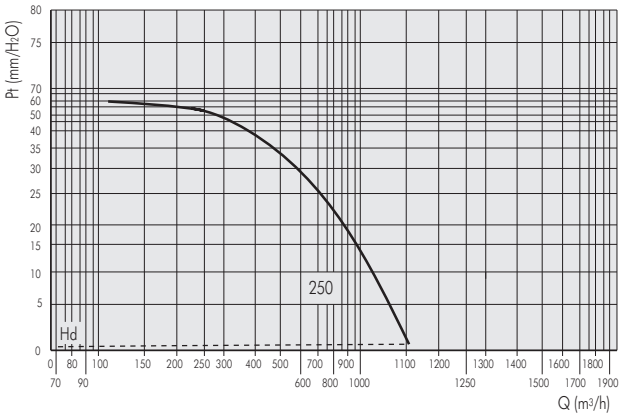

SEK. 7

LINE-METAL 315

Tip Type	Model Model	U	r.p.m.	Pm (kW)	In max (A)	IP/CL	Reg.
LINE-METAL	315 A	M	2650	0,18	0,8	44/B	RVN o RVM
LINE-METAL	315 B	M	2630	0,29	1,3	44/B	RVM

Tip Type	Mod.	Lp dB(A)	Lw dB (A) u oktavi spektruma (Hz) "in octave spectrum (Hz)								
			Tot.	63	125	250	500	1k	2k	4k	8k
LINE-METAL	315 A	53	56	/	38	40	44	49	51	47	39
LINE-METAL	315 B	57	60	/	40	41	47	50	52	49	41

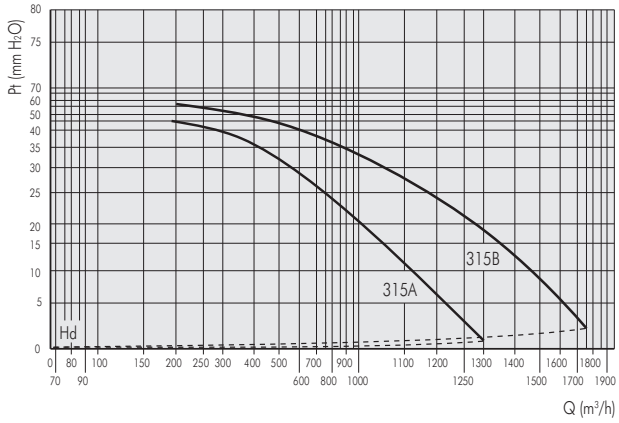

LINE-METAL 355

Tip Type	Model Model	U	r.p.m.	Pm (kW)	In max (A)	IP/CL	Reg.
LINE-METAL	355 A	M	1330	0,25	1,12	44/B	RVN o RVS-1
LINE-METAL	355 B	M	2560	0,63	2,82	44/B	RV1

Tip Type	Mod.	Lp dB(A)	Lw dB (A) u oktavi spektruma (Hz) "in octave spectrum (Hz)								
			Tot.	63	125	250	500	1k	2k	4k	8k
LINE-METAL	355A	55	58	/	39	42	43	50	53	50	40
LINE-METAL	355B	60	62	/	42	43	47	51	55	52	41

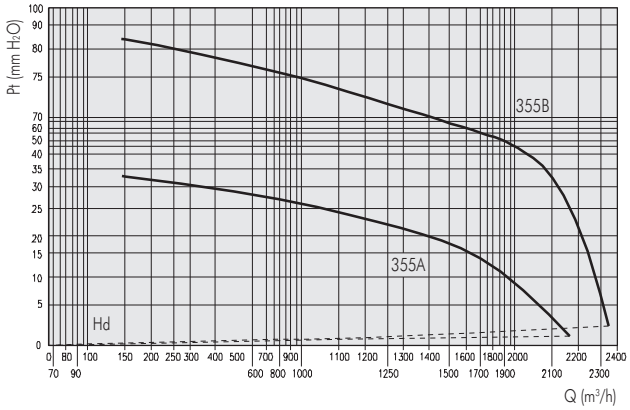

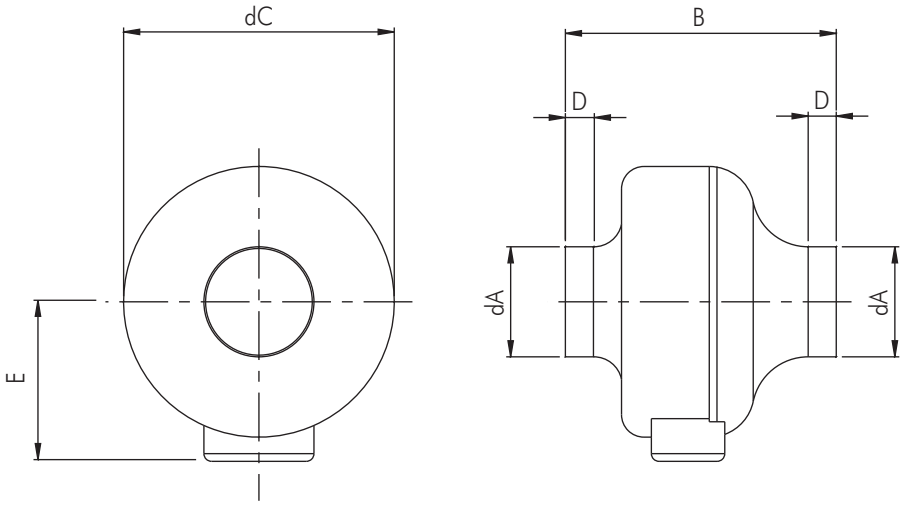

Tip/Type	dA	B	dC	D	E	kg
LINE METAL 100A	98	210	241	25	160	3
LINE METAL 100B	98	210	241	25	160	3
LINE METAL 125A	123	210	241	25	160	3
LINE METAL 125B	123	210	241	25	160	3
LINE METAL 150A	148	210	241	25	160	3
LINE METAL 150B	148	232	331	25	205	5
LINE METAL 160A	158	210	241	25	160	3
LINE METAL 160B	158	232	331	25	205	5
LINE METAL 200A	198	230	335	25	210	5
LINE METAL 200B	198	230	335	25	210	5
LINE METAL 250	248	230	335	25	210	5
LINE METAL 315A	313	295	404	30	245	8
LINE METAL 315B	313	305	404	30	245	9
LINE METAL 355A	355	400	484	50	280	12
LINE METAL 355B	355	400	484	50	280	14

DODATNI DELOVI / ACCESSORIES LINE-METAL

FIKSIRAJUĆI NOSAČ / FIXING BRACKETS

Set podupirača za fiksiranje na zid. Izrađen od galvanizovanog čelika i kompletiran je završetcima.

Set of brackets for the wall fixing. Manufactured in galvanized steel sheet and completed with findings.

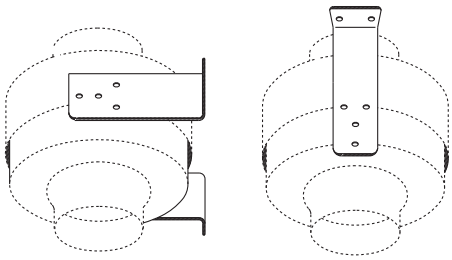

Mod. 100-315

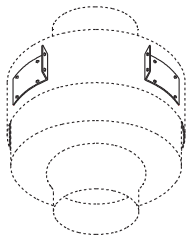

Mod. 355
Po narudžbini / iUpon request

ŽALUZINA / SHUTTER

Zadnja vučna regulatorska žaluzina izrađena od galvanizovanog čelika sa ukrasom na zatvarajućim krilima, za bolji protok i manju buku.

Back draught throttle shutter in galvanized steel sheet with garnishing on the closing of the fins, for a greater sealing and less noise.

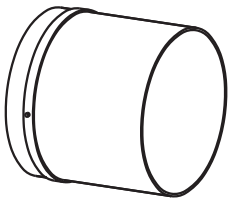

FIKSIRNI PRSTEN / FIXING COLLAR

Prsten izrađen od galvanizovanog čelika , s unutrašnje strane presvučen Polyurethan-om .
Neophodan za povezivanje ventilatora na cev- cevni sistem..

Collar manufactured in galvanized steel sheet, inside lined with expanded polyurethane. Necessary to connect the fan to the duct.

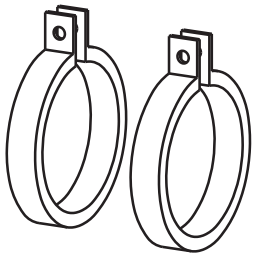

ZAŠTITNA REŠETKA / PROTECTION GUARD

Deo namenjen za zaštitu , izradjen od metala otpornog na koroziju , montira se šrafovima na cevni deo kucišta ventilatora. Pažnja: *ovaj deo je neophodan u slucaju kada lopatice nisu uopšte zašticene.*

Set composed by protection guard manufactured in steel rod protected against the corrosion and screws for the fixing on the round side of the fan. ATTENTION: this accessory becomes indispensable if the side of the fan is not ducted or protected in any other way.

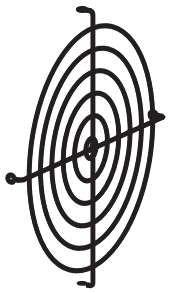

PRIGUŠIVAČ / SILENCER

Apsorbtni prigušivac.strukture u galvanizovanom čeliku sa akustičnom linijom.Sa unutrašnje strane izrađeno od galvanizovanog čelika, mikro sito koje dozvoljava apsorbciju vazdušne buke prouzrokovanu brzinom vazduha.

Absorption silencer. The structure is in galvanized steel sheet containing acoustic lining. Inside a micro drilled net in galvanized steel allows the absorption of the aerial noise caused by the velocity of the air.

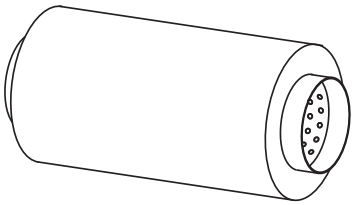

Tip/Type	dA	dA1	B	L	Kg
100	100	200	40	600	4
125	125	224	40	600	5
160	160	260	40	600	6
200	200	315	40	900	10
250	250	355	60	900	13
315	315	450	60	900	15
355	355	450	60	900	15

Dimensije u mm/*Dimensions in mm*

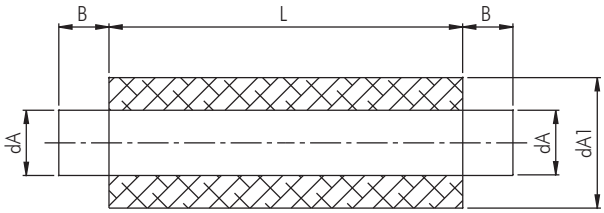

Lw dB (A) u oktavi spektruma (Hz)							
Tip/Type	125	250	500	1k	2k	4k	8k
100	8	14	26	34	41	45	25
125	6	12	22	28	37	38	22
160	5	10	18	23	33	30	19
200	7	13	24	31	44	31	20
250	6	11	21	27	39	25	19
315	5	9	18	23	32	20	18
355	5	10	20	25	32	23	19

ERM-EX

Radiaksijalni ventilatori povecanog stepena sigurnosti
"Increased safety" mixed flow fans

OSNOVNI PODACI :

ERM – EX ventilatori su jedini radiaksijalni ventilatori povećanog stepena sigurnosti – Eex – e dostupni na tržištu . Specifična konstrukcija dozvoljava ugradnju u rizičnom okruženju kao što je : (fabrika akumulatora, boja... itd). Pažnja ! (odabir tipa sigurnosti motora zavisi od zone – mesta i stepena rizičnosti okoline gde se ventilator montira-ugrađuje.)
Pogledati stranice koje slede .
Pogodan za transport čistog vazduha do temperature od 50 °C.
ERM – EX serije nisu pogodne za regulaciju.

KONSTRUKCIJA :

- Kućište i radno kolo su izrađeni od specijalnog plastičnog materijala otpornog na varnice-udare .
- Monofazni električni motor , IP 54 , klase B , sa termo zaštitom.
Pogodan za neprekidan rad.
- Izvedba Eex- e IIB T3 u skladu sa EN50014/77 i EN50019/77, VDE0170/0171 standardima.
- El. Konekcija koja se nalazi u eksternoj kutiji , je otporna na spoljašnje vremenske uticaje sa stepenom zaštite IP 54 .

PAŽNJA :

Odabir tipa sigurnosti motora zavisi od zone – opasnosti i stepena rizičnosti okoline gde se ventilator montira-ugrađuje.
Samo kompetentni nadležni organi mogu odrediti klasu-zonu opasnosti rizične-hazardne okoline.

GENERAL DESCRIPTION

The ERM-EX fans are the only mixed flow in line series in increased safety execution "EEx-e" available on the market. The particular construction allows the installation in hazardous environment as: battery rooms, dyeing-plants, garages, etc. (Note: the choice of the type of the motor protection must be made in function of the dangerous zones and classes of hazardous areas in which the fan will be installed in. See the following pages). Suitable to convey clean air with working temperature upto 50°C. The ERM-EX series are not suitable for regulation.

CONSTRUCTION

- Housing and impeller are manufactured in sparkproof plastic material resistant to the impacts.
- Single-phase electric motor, IP 54, class B, with thermal protection. Suitable for working in continuous service. Execution EEx-e IIB T3, according to EN50014/77 and EN50019/77, VDE0170/0171 standards.
- Electric connections enclosed in an external terminal box, resistant to atmospheric agents with IP54 protection degree.

ATTENTION

The choice of the motor protection type must be made in function of the zones of danger and the classes of hazardous areas, which the fan will be installed in. Only the competent authorities can attribute the classes and the zones of danger to the hazardous areas.

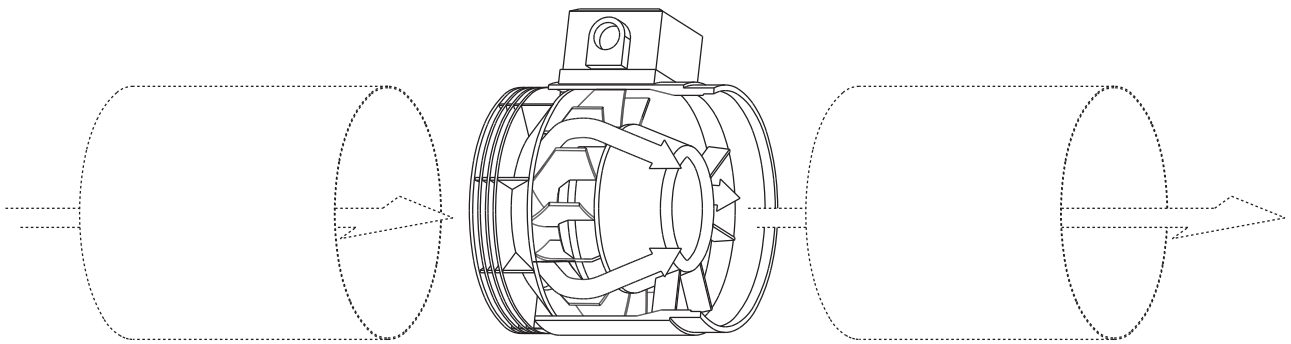

PERFORMANSE / PERFORMANCE

ERM-EX

Frekvencija 50 Hz - Temperatura vazduha 15°C – Barometarski pritisak760 mm Hg – Specifična težina vazduha1,22 Kg/m3
Frequency 50Hz – Air temperature 15°C – Barometric pressure 760 mm Hg – Air specific weight 1,22 Kg/m3

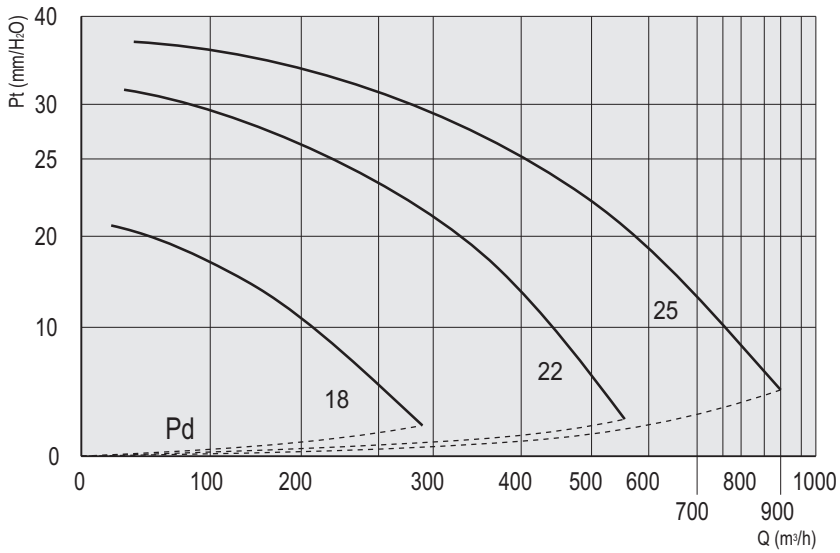

ERM-EX

Tip Type	Model Model	U	r.p.m.	Pm (kW)	In max (A)	IP/CL	Lw dB(A)
ERM-EX	18	M	2760	0,059	0,28	54/B	64
ERM-EX	22	M	2850	0,2	0,93	54/B	74
ERM-EX	25	M	2890	0,3	1,42	54/B	80

SEK. 7

DIMENZIJE / DIMENSIONS

ERM-EX

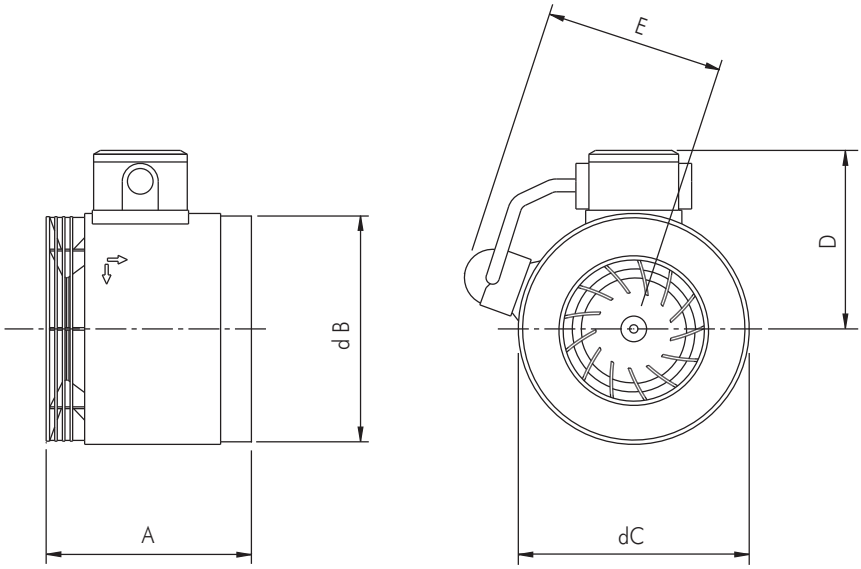

Tip/Type	A	dB	dC	D	E	kg
ERM-Ex 18	161	175	180	137	140	2
ERM-Ex 22	175	221	230	165	165	5
ERM-Ex 25	205	245	255	178	180	6,5

Dimenzije u mm/Dimensions in mm

SS-BOX

Akustično centrifugalni ventilatori unazad zakrivljenih lopatica
Acoustic backward bladed centrifugal fans

OSNOVNI PODACI :

Nizak nivo buke, čini ovu seriju ventilatora pogodnim za industrijske pogone manjih kapaciteta, gde je mala dimenzija I jednostavnost montiranja važna stavka. Lako odvajanje lopatica od motora, čini ovaj ventilator jednostavnim za održavanje. Standardizovan ulazni i izlazni obod , mogućnost regulacije brzine čini SS – BOX seriju ventilatora ekskluzivnom i jedinstvenom.
Pogodan za transport čistog vazduha , na temperaturi do 40 °C.
Montirani uređaj mora biti u vodoravnom položaju.

KONSTRUKCIJA :

- Kućište je izrađeno od galvanizovanog čelika , s unutrašnje strane presvučen akustičnom izolacijom debljine (50 mm).
- Monofazni električni motor, IP 44/IP 20, klase B, sa termalnom zaštitom pogodan za regulisanje brzine (regulatorom dostupnim u katalogu).
- Radno kolo sa unazad zakrivljenim lopaticama velike efikasnosti (mod. 125 – 160 – 200 – 250)
- Ventilator sa unapred zakrivljenim lopaticama duplog otvora (model 315 – 355 – 400 – 450)

DELOVI :

- Regulator brzine
- Žaluzine
- Zaštitne rešetke
- Cevna stega
- Prigušivač

Pažnja ! : karakteristike dodatnih delova na strani 6.

GENERAL DESCRIPTION

The low noise level of these fans make them suitable for being installed in small exhausting plants, where limited dimensions and easy installation are also required. The possibility of easy removal of the motor-impeller assembly for maintenance, the standardized inlet and outlet flanges and the possibility of speed regulation make the SS-BOX fan series exclusive and unequalled. Suitable to convey clean air to a max temperature of 40°C Round inlet and outlet. They must be installed only in horizontal position.

CONSTRUCTION

- Main structure in galvanized steel sheet, inside lined with acoustic insulation (thickness 50 mm)
- Single-phase electric motor, IP44/IP20, class B, with thermal protection, suitable for speed regulation (using the regulators available in this catalogue).
- Backward bladed impeller with high efficiency (mod. 125-160-200-250)
- Double inlet forward bladed fan (mod. -15-355-400-450)

ACCESSORIES

- Speed regulators.
- Shutters.
- Protection guards.
- Collars for fixing to the duct.
- Silencers.

Note: See page 6 for characteristics of accessories.

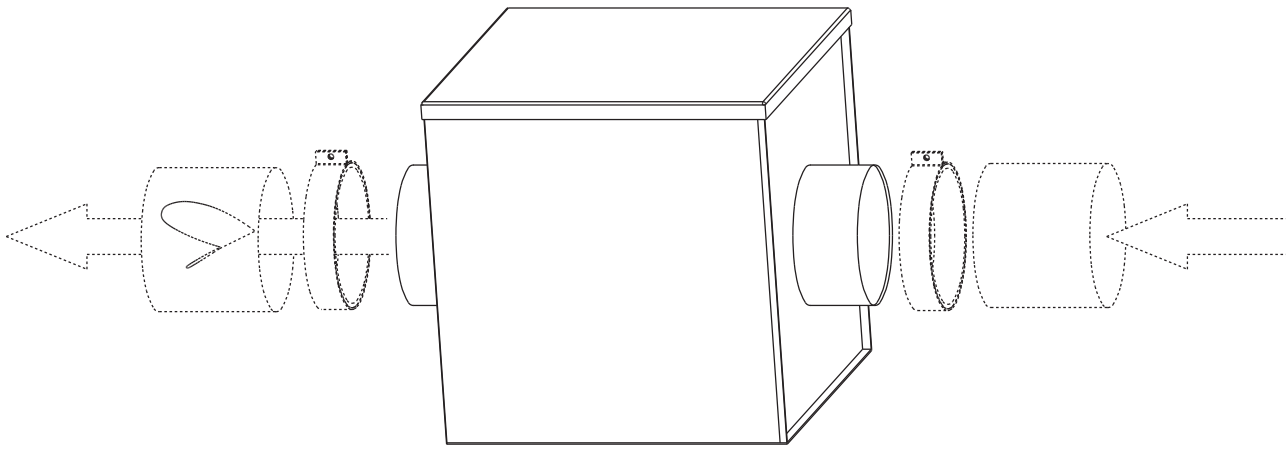

Frekvencija 50 Hz - Temperatura vazduha 15°C – Barometarski pritisak760 mm Hg – Specifična težina vazduha1,22 Kg/m3
Frequency 50Hz – Air temperature 15°C – Barometric pressure 760 mm Hg – Air specific weight 1,22 Kg/m3

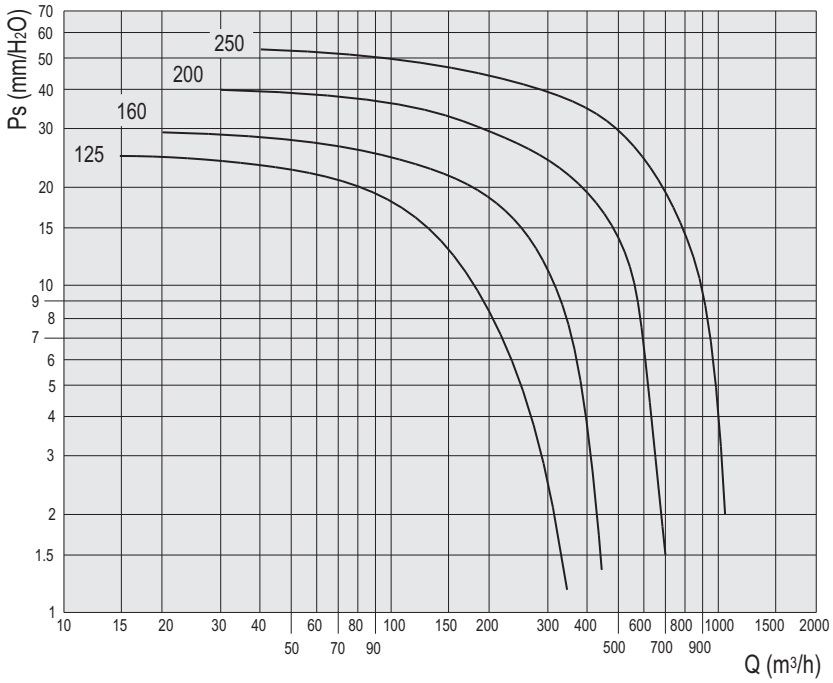

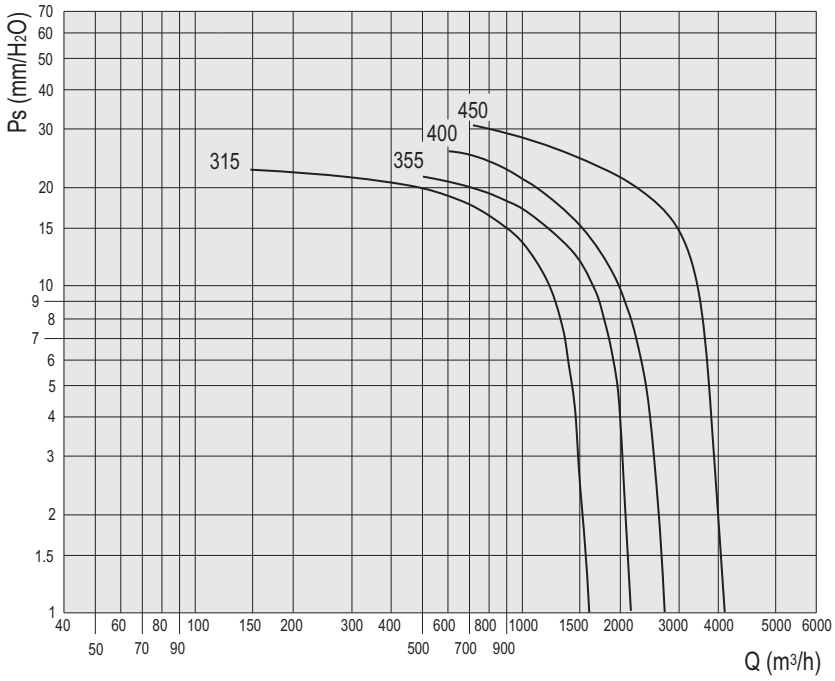

Tip Type	Model Model	U	P	Pm (kW)	In max (A)	IP/CL	Reg.
SS-BOX	125 M	M	2	0,07	0,4	44/B	RVN o RVS
SS-BOX	160 M	M	2	0,11	0,52	44/B	RVN o RVS
SS-BOX	200 M	M	2	0,18	0,9	44/B	RVM
SS-BOX	250 M	M	2	0,3	1,4	44/B	RVM
SS-BOX	315 M	M	4	0,14	1,7	20/B M/AP	RV-1 o RVM-2
SS-BOX	355 M	M	6	0,24	2,2	44/B	RV-1 o RVM-2
SS-BOX	400 M	M	6	0,24	3	44/B	RV-1 o RVM-2
SS-BOX	450 M	M	6	0,55	5,6	44/B	RV-2 o RVM-3

Tip Type	Mod.	Lp dB(A)	Lw dB (A) oktava spektruma u (Hz) " in octave spectrum (Hz)								
			Tot.	63	125	250	500	1k	2k	4k	8k
SS-BOX	125	32	39	29	28	29	34	27	28	31	30
SS-BOX	160	36	43	34	28	33	36	35	33	34	35
SS-BOX	200	41	48	32	37	42	43	40	37	36	33
SS-BOX	250	42	46	34	34	39	41	36	37	39	30
SS-BOX	315	48	55	36	35	37	36	35	33	29	26
SS-BOX	355	48	55	36	35	37	36	35	33	29	26
SS-BOX	400	49	56	36	35	37	41	35	33	29	26
S-BOX	450	49	56	36	35	37	36	35	33	29	26

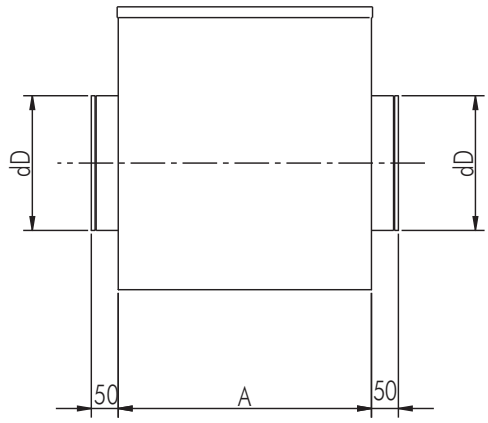

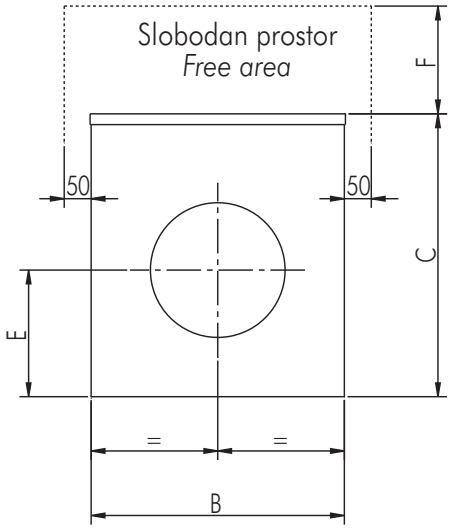

Tip/Type	A	B	C	dD	E	F	kg
SS-BOX 125	360	360	385	125	180	400	14
SS-BOX 160	400	400	425	160	200	430	17
SS-BOX 200	430	430	450	200	215	460	20
SS-BOX 250	470	470	525	250	235	530	25
SS-BOX 315	550	550	550	315	300	560	37
SS-BOX 355	550	550	550	355	300	560	43
SS-BOX 400	650	650	650	400	380	660	59
SS-BOX 450	750	750	750	450	430	760	79

Dimenzije u mm/Dimensions in mm

AxB

Centrifugalni ventilatori sa unapred zakrivljenim lopaticama za četvorougaone kanalne sisteme

Rectangular duct foreward bladed centrifugal fans

OSNOVNI PODACI :

AxB serija ventilatora predstavlja najpovoljnije i najmodernije rešenje transporta vazduha kroz četvorougle kanale- oluke.
Dizajniran je za praktično i lako priključivanje na četvorougaone kanalne sisteme.
Serija je predviđena 2,4,6 – o polnim, trofaznim ili monofaznim motorima. Koristi direktan prenos unapred zakrivljenih lopatica centrifugalnog ventilatora (izuzev modela 4x2 M2 sa unazad zakrivljenim lopaticama) smeštenim u obodnom delu kanalnog sistema.
El. Konektor je smešten u eksterno kućište na samom kućištu ventilatora radi lakše konekcije – priključenja.
Pogodan je za transport čistog vazduha maksimalne temperature do 50 °C.

KONSTRUKCIJA :

- Kućište je izrađeno od čelika sa fiksnirnim obodima standardnih dimenzija.
- Monofazni i trofazni električni motor , IP 44 klase F sa termalnom zaštitom, Pogodan za regulaciju (koristeći regulatore iz datog kataloga)
- Radno kolo sa unapred zakrivljenim lopaticama (izuzev modela 4x2 M2 , sa unazad zakrivljenim lopaticama) Sa prilično visokom efikašnošću i niskim nivoom buke.
- Eksterni el. konektor smešten u nepromočivu techno – polymer-nu kutiju, otpornu na atmosferske uticaje sa stepenom zaštite IP 54.

DODATNI DELOVI :

- Regulator brzine
- Prigušivač
- Fleksibilni preklučci.

GENERAL DESCRIPTION

The AxB series represents the least expensive solution for the installation of centrifugal fans in ducted plants. It has been designed for the practical and quick inclusion in the duct strokes of rectangular section. The series foresees models of 2,4 and 6 poles, three-phase and single-phase. It uses direct drive forward bladed centrifugal fans (except for the model 4X2 M2 which is backward curved) housed in a flanged piece of duct. The electrical connections are housed in a suitable box placed outside for an easy connection. Suitable to convey clean air with a max. temperature of 50°C.

CONSTRUCTION

- Casing in galvanized steel sheet with fixing flanges in standardized dimensions.
- Single-phase and three-phase electric motor, IP44, class F, with thermal protection, suitable for regulation (using the suitable regulators in this catalogue).
- Forward bladed impeller (except model 4x2 M2, which is backward curved) with fairly high efficiency and low noise level.
- External electric connections, housing in self-extinguishing techno-polymeric box, resistant to atmospheric agents with protection degree IP54.

ACCESSORIES

- Speed regulators.
- Silencers.
- Flexible connections.

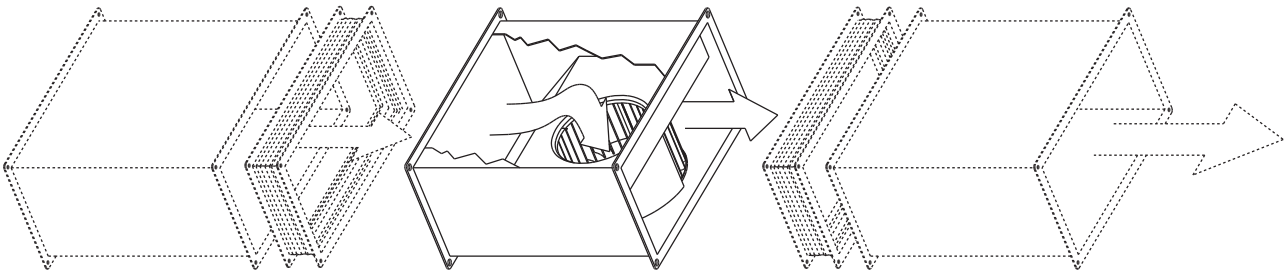

Važno : izlazni vod mora biti bar 1.5 m dug.
Note: the outlet duct must be at least 1,5 meters long.

Frekvencija 50 Hz - Temperatura vazduha 15°C – Barometarski pritisak760 mm Hg – Specifična težina vazduha1,22 Kg/m3
Frequency 50Hz – Air temperature 15°C – Barometric pressure 760 mm Hg – Air specific weight 1,22 Kg/m3

AxB 4x2

Tip Type	Model Model	U	P	Pm (kW)	In max (A)	IP/CL	Reg.
AxB	4x2 M2	M	2	0,15	0,6	44/B	RVN
AxB	4x2 M4	M	4	0,3	1,4	44/B	RV-1 o RVM
AxB	4x2 T4	T	4	0,3	0,65	44/B	RVT

Tip/Type	Lp dB(A)	Lw dB (A) oktava spektruma u (Hz) " in octave spectrum (Hz)								
		Tot.	63	125	250	500	1k	2k	4k	8k
AxB 4x2 M2	63	63	38	45	59	55	56	49	46	41
AxB 4x2 M4	55	55	38	45	59	55	56	49	46	41
AxB 4x2 T4	53	53	33	41	58	51	49	44	40	33

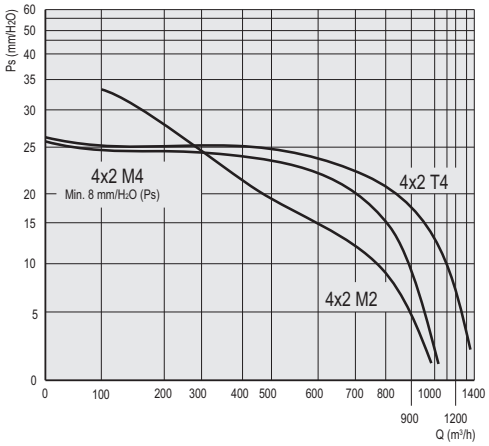

AxB 5x25

Tip Type	Model Model	U	P	Pm (kW)	In max (A)	IP/CL	Reg.
AxB	5x25 M4	M	4	0,6	2,7	44/B	RVM-2 o RV-1
AxB	5x25 T4	T	4	0,56	1,1	44/B	RVT

Tip/Type	Lp dB(A)	Lw dB (A) oktava spektruma u (Hz) " in octave spectrum (Hz)								
		Tot.	63	125	250	500	1k	2k	4k	8k
AxB 5x25 M4	56	63	39	50	58	58	55	52	47	50
AxB 5x25 T4	55	62	38	46	53	55	56	52	50	55

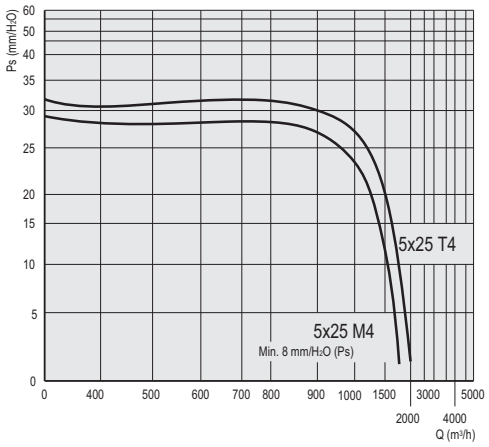

AxB 5x3

Tip Type	Model Model	U	P	Pm (kW)	In max (A)	IP/CL	Reg.
AxB	5x3 M4	M	4	1,1	4,8	44/B	RV-2 o RVM-3
AxB	5x3 T4	T	4	1,1	2	44/B	RVT
AxB	5x3 T6	T	6	0,34	0,65	44/B	RVT

Tip/Type	Lp dB(A)	Lw dB (A) oktava spektruma u (Hz) " in octave spectrum (Hz)								
		Tot.	63	125	250	500	1k	2k	4k	8k
AxB 5x3 M4	59	66	38	54	62	58	61	55	52	47
AxB 5x3 T4	57	64	43	52	59	55	58	54	50	48
AxB 5x3 T6	51	58	32	44	52	54	50	46	44	36

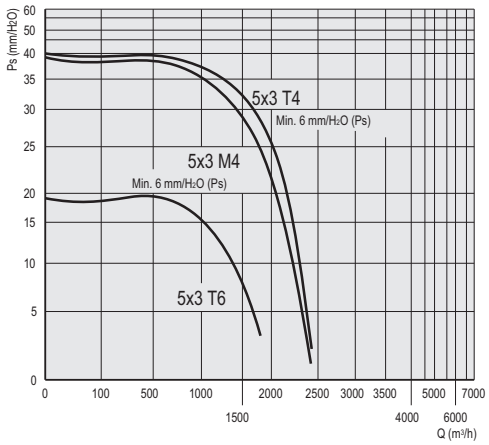

AxB 6x3

Tip Type	Model Model	U	P	Pm (kW)	In max (A)	IP/CL	Reg.
AxB	6x3 T4	T	4	1,6	2,5	44/B	RVT-1
AxB	6x3 T6	T	6	0,7	1,4	44/B	RVT

Tip/Type	Lp dB(A)	Lw dB (A) oktava spektruma u (Hz) " in octave spectrum (Hz)								
		Tot.	63	125	250	500	1k	2k	4k	8k
AxB 6x3 T4	58	65	40	55	60	60	57	54	52	47
AxB 6x3 T6	49	56	37	51	51	48	46	42	40	35

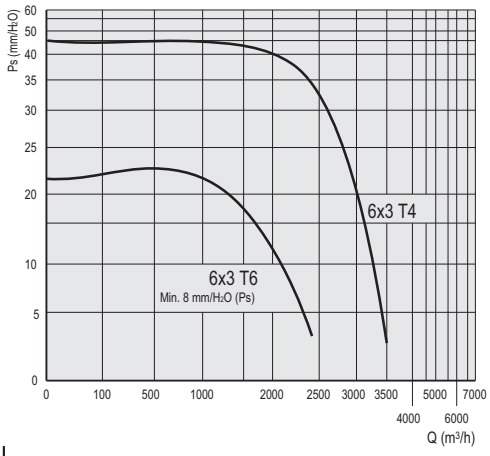

PERFORMANSE / PERFORMANCE

AxB

Frekvencija 50 Hz - Temperatura vazduha 15°C – Barometarski pritisak760 mm Hg – Specifična težina vazduha1,22 Kg/m3
Frequency 50Hz – Air temperature 15°C – Barometric pressure 760 mm Hg – Air specific weight 1,22 Kg/m3

AxB 6x35

Tip Type	Model Model	U	P	Pm (kW)	In max (A)	IP/CL	Reg.
AxB	6x35 T4	T	4	2,5	5	44/B	RVT-2
AxB	6x35 T6	T	6	0,9	1,5	44/B	RVT

Tip/Type		Lp dB(A)	Lw dB (A) oktava spektruma u (Hz) " in octave spectrum (Hz)								
			Tot.	63	125	250	500	1k	2k	4k	8k
AxB	6x35 T4	61	68	49	62	62	60	60	55	52	48
AxB	6x35 T6	53	60	43	52	56	53	50	56	45	40

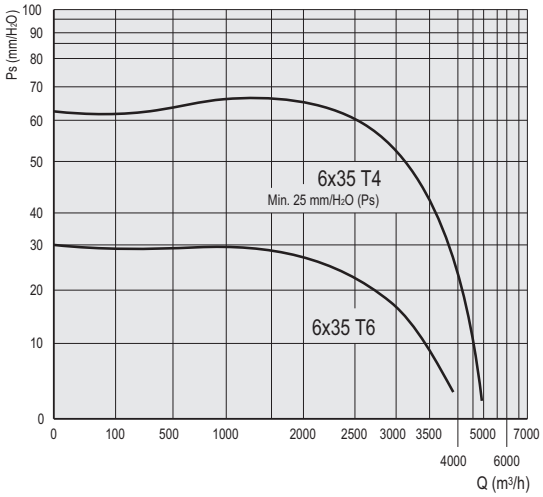

AxB 7x4

Tip Type	Model Model	U	P	Pm (kW)	In max (A)	IP/CL	Reg.
AxB	7x4 T4	T	4	3,2	5,8	44/B	RVT-2
AxB	7x4 T6	T	6	1,4	3	44/B	RVT-1

Tip/Type		Lp dB(A)	Lw dB (A) oktava spektruma u (Hz) " in octave spectrum (Hz)								
			Tot.	63	125	250	500	1k	2k	4k	8k
AxB	7x4 T4	66	73	56	65	67	65	68	63	63	59
AxB	7x4 T6	56	63	49	57	57	59	55	50	46	41

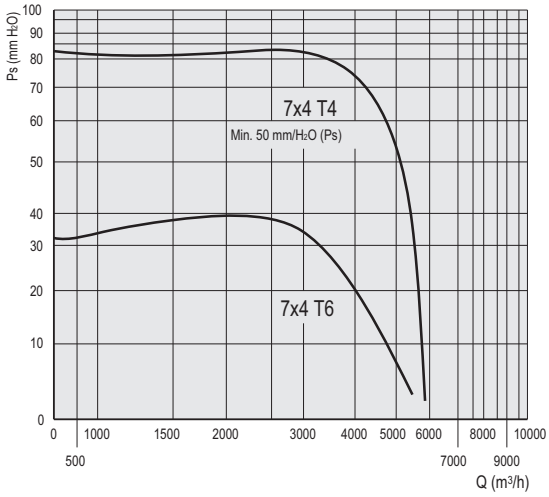

SEK. 7

DIMENZIJE / DIMENSIONS

AxB

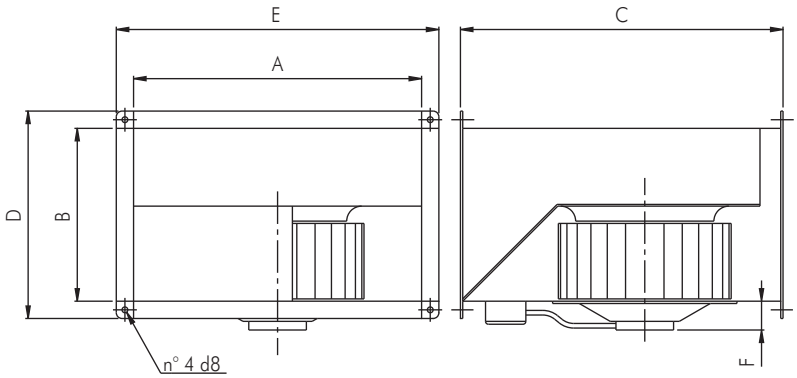

Tip/Type	A	B	C	D	E	F	kg
AxB 4x2	400	200	500	240	440	40	15
AxB 5x25	500	250	540	300	550	40	20
AxB 5x3	500	300	570	350	550	40	28
AxB 6x3	600	300	650	350	650	60	35
AxB 6x35	600	350	730	400	650	90	45
AxB 7x4	700	400	790	440	740	90	65

Dimenzije u mm/Dimensions in mm

FLEKSIBILNA SPOJNICA / FLEXIBLE JOINT

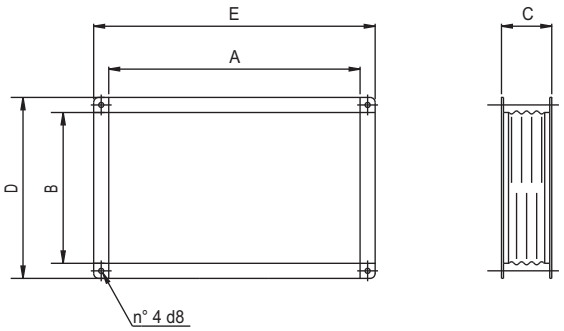

Tip/Type	A	B	C	D	E
4x2	400	200	120	240	440
5x25	500	250	120	310	560
5x3	500	300	120	360	560
6x3	600	300	120	360	660
6x35	600	350	120	410	660
7x4	700	400	120	440	740

Dimenzije u mm/Dimensions in mm

PRIGUŠIVAČ / SILENCER

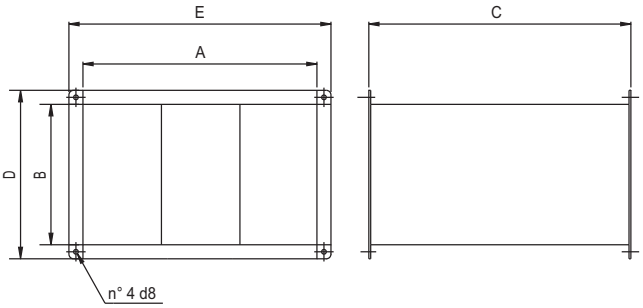

Tip/Type	A	B	C	D	E
4x2	400	200	500	240	440
5x25	500	250	560	310	560
5x3	500	300	560	360	560
6x3	600	300	710	360	660
6x35	600	350	710	410	660
7x4	700	400	780	440	740

Dimenzije u mm/Dimensions in mm

	Oslabljenje buke (dB) u spektrumskoj oktavi(Hz) Noise attenuation (dB) in octave spectrum (Hz)						
Tip/Type	125	250	500	1k	2k	4k	8k
4x2	6	12	20	25	23	15	11
5x25	4	7	13	16	15	10	8
5x3	5	6	12	15	14	9	7
6x3	7	13	21	26	24	16	12
6x35	6	12	20	25	23	15	11
7x4	4	7	13	16	15	10	8

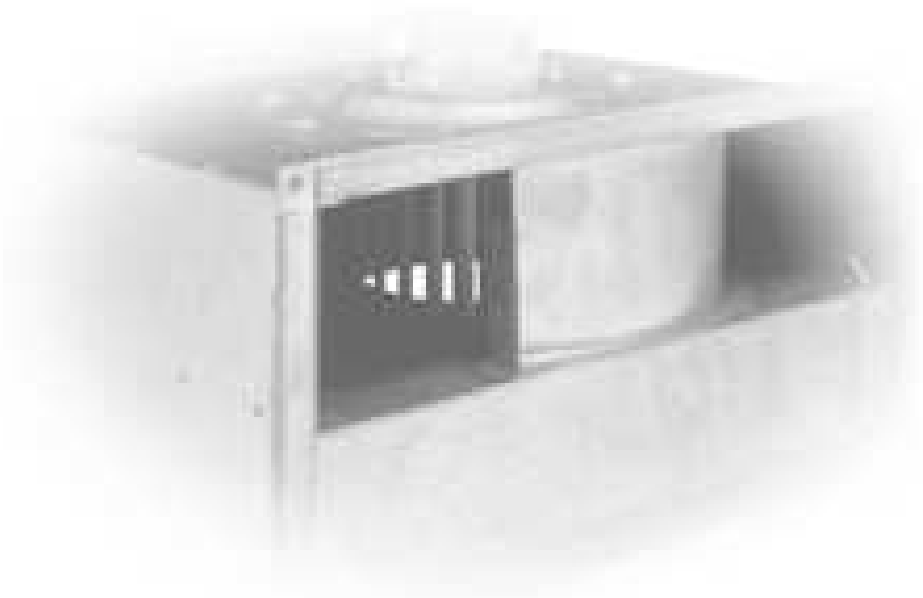

LEGENDA/LEGEND

PS = Statički pritisak (mm/H2O)
PD = Dinamički pritisak (mm/H2O)
Pt = Totalni pritisak (mm/H2O)
Q = Transport vazduha (m3/H2O)
U = Nominalna voltaža (V)
M = Nominalna voltaža i frekvencija mono faze (230 V–50 Hz)
T = Nominalna voltaža i frekvencija tro faze (400 V – 50 Hz)
Rpm = Broj obrataja motora
Pm = Snaga morora (KW)
In = Nominalna apsorbna veličina (A)
IP = Mehanička zaštita motora
CI = Kategorija izolacije motora
S = Spoljašnja površina (m2)
C = Brzina vazduha (m/s)
Pd2 = Inertni moment (Kgm2)
Lp = Nivo pritiska zvuka (dB)
Lw = Nivo jačine zvuka (dB)
Reg. = Regulator brzine
P = n° Polovi
2 pola = 3000 obrtaja
4 pola = 1500 obrtaja
6 pola = 1000 obrtaja
8 pola = 750 obrtaja

Pažnja ! Nivo pritiska zvuka se meri u slobodnom prostoru od 1.5 m razmaka od centra ventilatora , u bilo kom pravcu sa unutrašnjom i spoljašnjom stranom spoljenom na cevni sistem.

Značajno ! Buka samog ventilatora će biti veća , ukoliko se ne meri u slobodnom prostoru.

Ostvarljivi standardi : testiranje karakteristika je vršeno u skladu sa DIN24163 standardom, testiranje akustike je u skladu sa DIN45635T38 standardom.

Ps = Static pressure (mm/H_2O)
Pd = Dynamic pressure (mm/H_2O)
Pt = Total pressure (mm/H_2O)
Q = Air delivery (m^3/h)
U = Rated voltage (V)
M = Rated voltage and frequency single-phase (230V-50Hz)
T = Rated voltage and frequency three-phase (400V-50Hz)
rpm = Nominal motor speed
Pm = Installed motor power (kW)
In = Maximal absorbed current (A)
IP = Motor mechanical protection
CI = Motor Insulation class
S = Outlet area (m^2)
C = Air velocity (m/s)
Pd2 = Impeller inertia moment (Kgm^2)
Lp = Sound pressure level (dB)
Lw = Sound power level (dB)
Reg. = Speed regulator
P = n° Poles
2 poles = 3000 nominal rpm
4 poles = 1500 nominal rpm
6 poles = 1000 nominal rpm
8 poles = 750 nominal rpm

Attention: the sound pressure level is measured in free field at 3 m distance from the fan centre, in any direction, with inlet and outlet sides connected to duct.

Note: when selecting it is necessary to keep in mind that the noise of the fan, if not measured in free field, will be higher than the shown values.

Standards achieved: Performance tests according to DIN24163 standard - Acoustic tests according to DIN45635T38 standard

FAKTORI PRETVARANJA / CONVERSION FACTORS

Snaga / Power

	W	kW	CV
W	1	0,001	0,00136
kW	1000	1	1,36
CV	735,5	0,7355	1

Pritisak / Pressure

	Pa	mm/H_2O	in.WG
Pa	1	0,101972	0,00401
mm/H_2O	9,807	1	0,0394
in.WG	249,09	25,4	1

Protok vazduha / Flow rate

	m^3/s	m^3/h	cfm
m^3/s	1	3600	2118,88
m^3/h	0,0002778	1	0,5886
cfm	0,0004719	1,6990	1

KAKO NARUČITI / HOW TO ORDER

Primer / Example:	Tip / Type	Model / Model
	LINE METAL	160 B

Primer / Example:	Tip / Type	Model / Model
	ERM-EX	22

Primer / Example:	Tip / Type	Model / Model
	SS-BOX	315 M

Primer / Example:	Tip / Type	Model / Model
	AxB	5x3 T6