Centrifugalni ventilatori sa unazad zakrivljenim lopaticama

Backward curved blade centrifugal fans

6

SQ

str. 2.6

Centrifugalni ventilatori sa unazad zakrivljenim lopaticama za transport čistog vazduha
Backward curved blade centrifugal fans for clean air

PR-L

str. 6.6

Centrifugalni ventilatori sa unazad zakrivljenim lopaticama za transport čistog ili delimično prljavog vazduha.
Backward curved blade centrifugal fans for clean or slightly dusty air

PS-L

str. 25.6

Centrifugalni ventilatori sa unazad zakrivljenim lopaticama za transport prljavog vazduha
Backward curved blade centrifugal fans for dusty air

PV-L

str. 43.6

Centrifugalni ventilatori sa unazad zakrivljenim lopaticama za transport prljavog vazduha
Backward curved blade centrifugal fans for dusty air

INDEKS / INDEX

Krovni centrifugalni ventilatori
CENTRIFUGAL ROOF FANS — SEK. 1

Krovni aksijalni ventilatori
AXIAL ROOF FANS — SEK. 2

Ventilatori sa ramom za usmeravanje vazduha
PLATE MOUNTED AND RING AXIAL FANS — SEK. 3

Cevni ventilatori
DUCTED AXIAL FANS — SEK. 4

Centrifugalni ventilatori malih dimenzija sa unapred zakrivljenim lopaticama i centrifugalni ventilatori izrađeni od livenog aluminijuma
SMALL SIZE FORWARD CURVED BLADE AND RADIAL CENTRIFUGAL FANS IN ALUMINIUM — SEK. 5

Centrifugalni ventilatori sa unazad zakrivljenim lopaticama
BACKWARD CURVED BLADE CENTRIFUGAL FANS FOR CLEAN AIR — SEK. 6

In line – redni centrifugalni ventilatori
IN LINE CENTRIFUGAL FANS — SEK. 7

Box ventilatori na direktan pogon sa dva otvora
DIRECT DRIVE DOUBLE INLET BOX FANS — SEK. 8

Centrifugalni box ventilatori i ventilatori sa duplim otvorom na remeni pogon
CENTRIFUGAL BOX FANS AND DOUBLE INLET BELT DRIVEN FANS — SEK. 9

Antikorozivni ventilatori
ANTICORROSIVE FANS — SEK. 10

Ventilatori za odstranjivanje dima
SMOKE EXTRACT FANS — SEK. 11

Regulatori brzine obrtaja
SPEED REGULATORS — SEK. 12

Akustično linijski centrifugalni ventilatori i Rekuperator toplote
IN LINE ACOUSTIC CENTRIFUGAL FANS AND HEAT RECUPERATOR — SEK. 13

SQ

Centrifugalni ventilatori sa unazad zakrivljenim lopaticama za transport čistog vazduha
Backward curved blade centrifugal fans for clean air

SEK. 6

OSNOVNI PODACI:

Pogodan je za transport čistog i delimično prljavog vazduha, temperature do maksimalnih 80 °C.Bitna karakteristika SQ serije ventilatora je da su četvorougaone konstrukcije , što omogućuje promenu položaja od (0 °- 90°-180°- 270°).
Dimenzija je redukovana zahvaljujući izostanku postolja motora.

KONSTRUKCIJA :

- Četvorougaono kućište izrađeno je od galvanizovanog čelika.
- Radno kolo sa unazad zakrivljenim lopaticama velike efikasnosti i jednim otvorom izrađeno od galvanizovanog čelika ,glavčina izrađena od pod pritiskom livenog aluminiuma.
- Izvedba 5 (sa radnim kolom direktno spoljenim na obod motora koji je podržan od strane kućišta), rotacija – promena položaja RD.
- Asinhroni trofazni ili monofazni motor u skladu sa IEC34- IEC72- 89/392 EEC- 89/336 EEC- 73/23 EEC standardima, CE kvalifikovan, IP 55 zaštitom klase F ,B5.
Pogodan je za S1 režim (neprekidan rad pri stalnom opterećenju).

DODATNI DELOVI :

- Spoljašnja i unutrašnja zaštitna rešetka izrađena u skladu sa UNI9219-DIN31001 standardima ,zaštićeni od spoljašnjih uticaja.

NA ZAHTEV :

- Model otporan na varnice klase B , u skladu sa tabelom NV105 ANIMA – COAER (SQ – AS).
- Model sa dve brzine (SQ- 2V)
- Model za izdvajanje dima, pogodan za transport čistog vazduha na temperaturi od 400 °C kroz 2 sata.
Pogledati u sekciji 11 (SQ – HT).

GENERAL DESCRIPTION

Suitable for conveying clean or slightly dusty air, up to the maximum temperature of 80°C. The main characteristic of the SQ series is the quadrangular construction, which allows to obtain four orientations (0°-90°-180°-270°) with the same fan. The dimensions are reduced thanks to the absence of the motor support.

CONSTRUCTION

- Volute with quadrangular sides, manufactured in galvanized steel sheet.
- Single inlet, backward curved wheel with high efficiency, manufactured in galvanized steel sheet and die-cast aluminium hub.
- Execution 5 (with impeller directly coupled to a flanged motor, supported by the case), rotation RD.
- Asynchronous three-phase or single-phase motor according to IEC34-IEC72 - 89/392 EEC - 89/336 EEC - 73/23 EEC standards, marked CE, IP55, class F, B5. Suitable for S1 service (continuous running at constant load).

ACCESSORIES

- Inlet and outlet protection guards manufactured according to UNI9219-DIN31001 standards and protected against atmospheric agents.

UPON REQUEST

- Spark proof version, class B, according to table NV105 ANIMA-COAER (SQ-AS).
- Two speed version (SQ-2V).
- Smoke extract version, suitable for exhausting clean air with temperature of 400°C for 2 hours. See section 11 (SQ-HT).

UGLOVI ISPUŠTANJA / DISCHARGE ANGLES

SQ

Rotacija *Rotation* RD	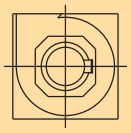	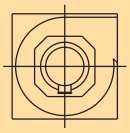	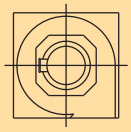	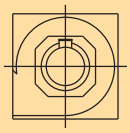
Forma/*Form*	0°	90°	180°	270°

4 pola/poles

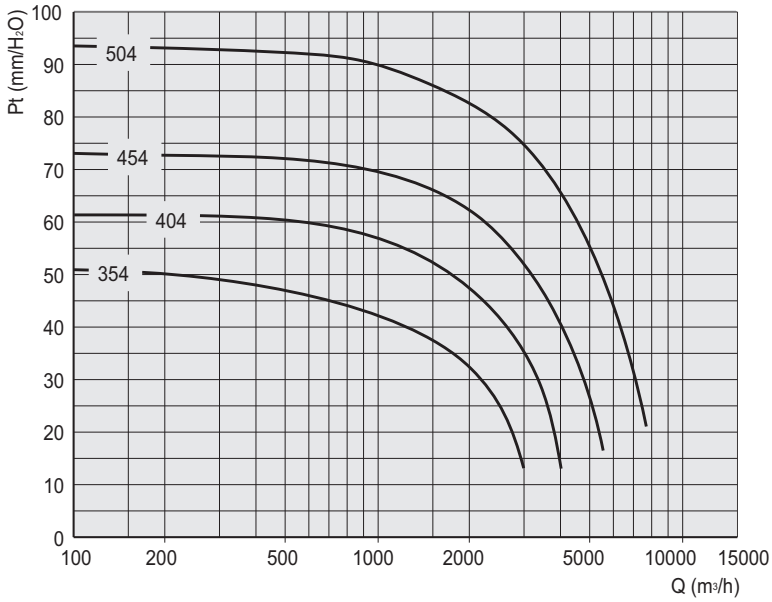

6 pola/poles

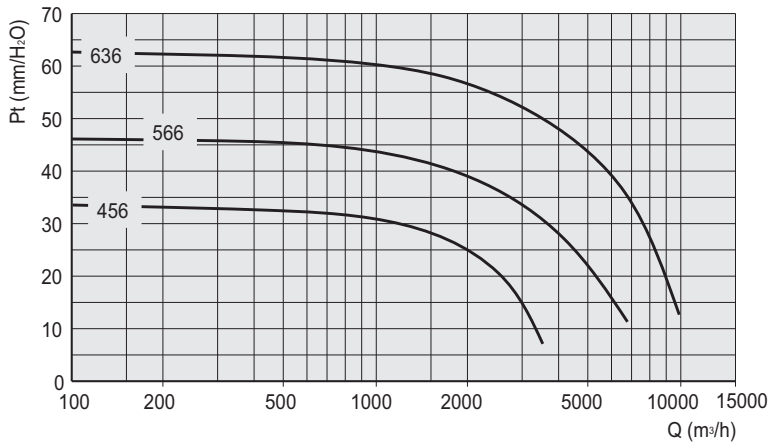

SEK.6

SQ 35

Tip Type	Model Model	U	P	Pm (kW)	In max (A)	IP/CL	Mot. (Gr)	Lp dB(A)
SQ	354	M	4	0,25	2,4	55/F	71	60
SQ	354	T	4	0,25	0,96	55/F	71	60

$Pd = 0{,}06218 \times (Q/209)^2 = mm\ H_2O$

SQ 40

Tip Type	Model Model	U	P	Pm (kW)	In max (A)	IP/CL	Mot. (Gr)	Lp dB(A)
SQ	404	M	4	0,37	2,9	55/F	71	62
SQ	404	T	4	0,37	1,2	55/F	71	62

$Pd = 0{,}06218 \times (Q/279{,}2)^2 = mm\ H_2O$

SQ 45

Tip Type	Model Model	U	P	Pm (kW)	In max (A)	IP/CL	Mot. (Gr)	Lp dB(A)
SQ	454	M	4	0,75	5,2	55/F	80	64
SQ	454	T	4	0,75	2	55/F	80	64
SQ	456	T	6	0,37	1,2	55/F	80	54

$Pd = 0{,}06218 \times (Q/343{,}4)^2 = mm\ H_2O$

SQ 50

Tip Type	Model Model	U	P	Pm (kW)	In max (A)	IP/CL	Mot. (Gr)	Lp dB(A)
SQ	504	T	4	1,1	2,8	55/F	90S	66

$Pd = 0{,}06218 \times (Q/400)^2 = mm\ H_2O$

SQ 56

Tip Type	Model Model	U	P	Pm (kW)	In max (A)	IP/CL	Mot. (Gr)	Lp dB(A)
SQ	566	T	6	0,55	1,8	55/F	80	60

$Pd = 0{,}06218 \times (Q/518{,}4)^2 = mm\ H_2O$

SQ 63

Tip Type	Model Model	U	P	Pm (kW)	In max (A)	IP/CL	Mot. (Gr)	Lp dB(A)
SQ	636	T	6	1,1	3,4	55/F	90L	63

$Pd = 0{,}06218 \times (Q/679{,}3)^2 = mm\ H_2O$

Tip/Type	A	A1	B	B1	C	D	E	F	G	H	dl	dL	M	a	b	c	d	e	f	Kg
SQ 35	620	520	650	550	295	325	370	280	285	470	230	420	178	215	315	140	250	130	350	40
SQ 40	680	580	790	690	280	400	450	340	305	490	265	450	238	235	350	160	270	140	385	50
SQ 45	740	580	880	720	305	435	490	390	335	550	285	500	261	265	382	180	300	150	417	65
SQ 50	820	660	960	800	340	480	525	435	355	610	330	555	281	285	415	200	320	160	450	82
SQ 56	890	730	1040	880	370	520	590	450	400	650	370	615	312	320	472	220	360	180	512	100
SQ 63	910	750	1100	940	410	500	640	460	450	700	435	690	333	370	532	260	410	200	572	125

Dimenzije u mm/Dimensions in mm

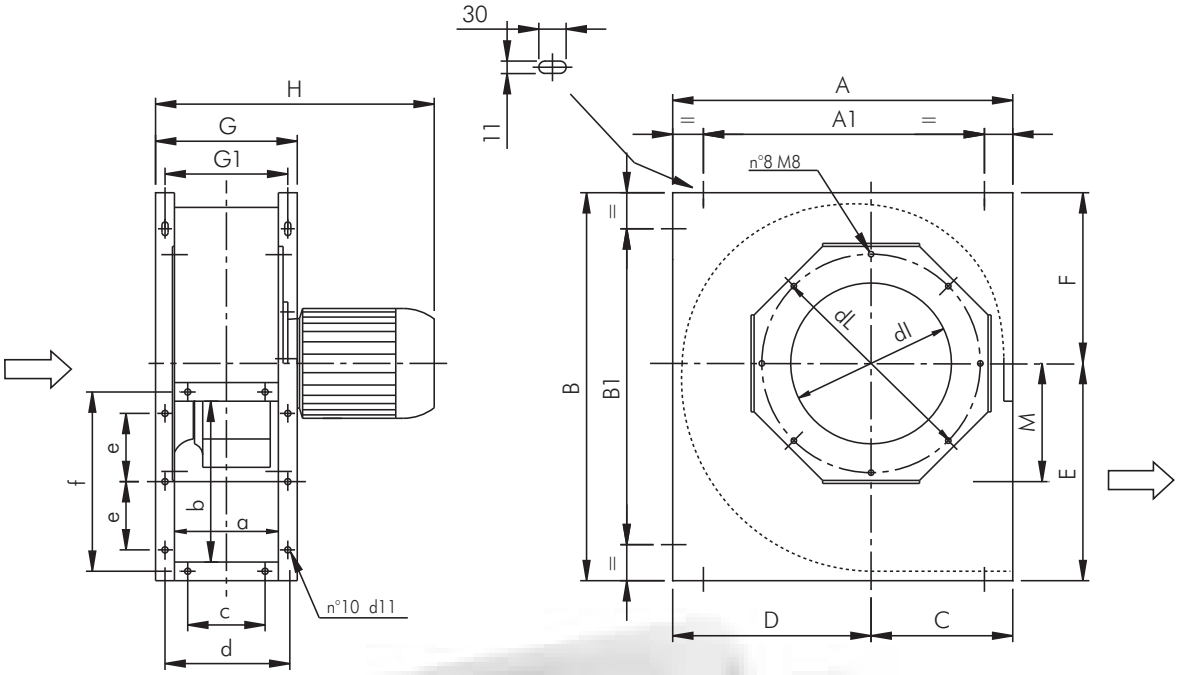

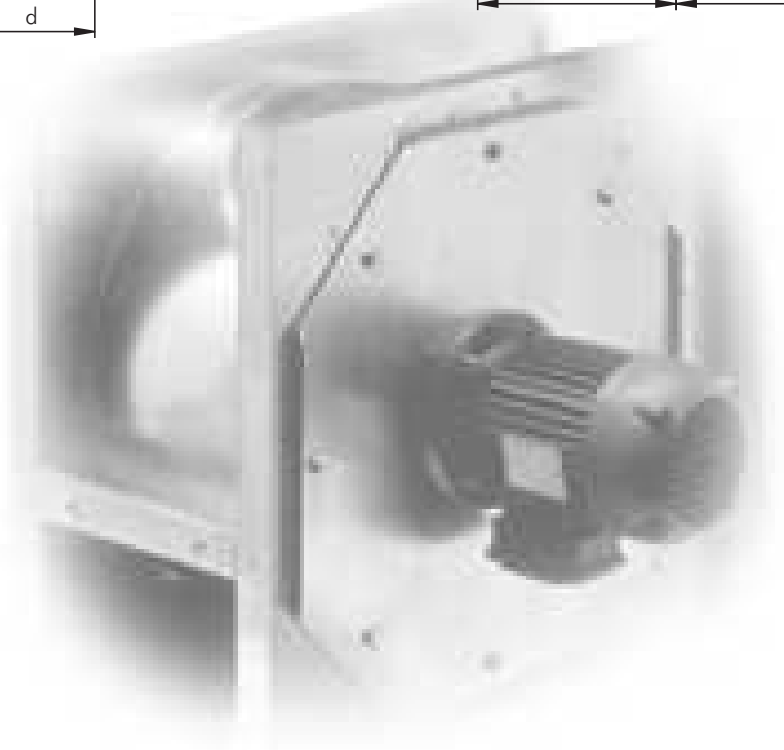

SEK. 6

LEGENDA/LEGEND

PS = Statički pritisak (mm/H2O)
PD = Dinamički pritisak (mm/H2O)
Pt = Totalni pritisak (mm/H2O)
Q = Transport vazduha (m3/H2O)
U = Nominalna voltaža (V)
M = Nominalna voltaža i frekvencija mono faze (230 V–50 Hz)
T = Nominalna voltaža i frekvencija tro faze (400 V – 50 Hz)
Rpm = Broj obrataja motora
Pm = Snaga morora (KW)
In = Nominalna apsorbna veličina (A)
IP = Mehanička zaštita motora
CI = Kategorija izolacije motora
S = Spoljašnja površina (m2)
C = Brzina vazduha (m/s)
Pd2 = Inertni moment (Kgm2)
Lp = Nivo pritiska zvuka (dB)
Lw = Nivo jačine zvuka (dB)
Reg. = Regulator brzine
P = n° Polovi
2 pola = 3000 obrtaja
4 pola = 1500 obrtaja
6 pola = 1000 obrtaja
8 pola = 750 obrtaja

Pažnja ! Nivo pritiska zvuka se meri u slobodnom prostoru od 1.5 m razmaka od centra ventilatora , u bilo kom pravcu sa unutrašnjom i spoljašnjom stranom spoljenom na cevni sistem.

Značajno ! Buka samog ventilatora će biti veća , ukoliko se ne meri u slobodnom prostoru.

Ostvarljivi standardi : testiranje karakteristika je vršeno u skladu sa DIN24163 standardom, testiranje akustike je u skladu sa DIN45635T38 standardom.

Ps = Static pressure (mm/H_2O)
Pd = Dynamic pressure (mm/H_2O)
Pt = Total pressure (mm/H_2O)
Q = Air delivery (m^3/h)
U = Rated voltage (V)
M = Rated voltage and frequency single-phase (230V-50Hz)
T = Rated voltage and frequency three-phase (400V-50Hz)
rpm = Nominal motor speed
Pm = Installed motor power (kW)
In = Nominal absorbed current (A)
IP = Motor mechanical protection
CI = Motor Insulation class
S = Outlet area (m^2)
C = Air velocity (m/s)
Pd2 = Impeller inertia moment (Kgm^2)
Lp = Sound pressure level (dB)
Lw = Sound power level (dB)
Reg. = Speed regulator
P = n° Poles
2 poles = 3000 nominal rpm
4 poles = 1500 nominal rpm
6 poles = 1000 nominal rpm
8 poles = 750 nominal rpm

Attention: the sound pressure level is measured in free field at 3 m distance from the fan centre, in any direction, with inlet and outlet sides connected to duct.

Note: when selecting it is necessary to keep in mind that the noise of the fan, if not measured in free field, will be higher than the shown values.

Standards achieved: Performance tests according to DIN24163 standard - Acoustic tests according to DIN45635T38 standard

FAKTORI PRETVARANJA / CONVERSION FACTORS

Snaga/Power

	W	kW	CV
W	1	0,001	0,00136
kW	1000	1	1,36
CV	735,5	0,7355	1

Pritisak/Pressure

	Pa	mm/H_2O	in.WG
Pa	1	0,101972	0,00401
mm/H_2O	9,807	1	0,0394
in.WG	249,09	25,4	1

Protok vazduha / Flow rate

	m^3/s	m^3/h	cfm
m^3/s	1	3600	2118,88
m^3/h	0,0002778	1	0,5886
cfm	0,0004719	1,6990	1

KAKO NARUČITI / HOW TO ORDER

Primer / Example:	Tip / Type	Model / Model	Voltaža / Voltage
	SQ	504	T

Tel. (++39) 030 9913575 (5 linee r.a.)
fax (++39) 030 9913766
E-mail dynair@dynair.it - www.dynair.it
Dynair S.r.l. - 25017 Lonato (Bs) - ITALY

Predstavnik za Srbiju :
AVIT
21000 Novi Sad, Temerinski put br.8
Tel. +381-21- 64- 10 -160 , Fax: +381-21-64-10-159
E-mail: info@avit.co.yu www.avit.co.yu

PR-L

Centrifugalni ventilatori sa unazad zakrivljenim lopaticama za transport čistog i delimično prljavog vazduha

Backward curved blade centrifugal fans for clean or slightly dusty air

OSNOVNI PODACI :

Ventilatori PR- L serije su našli svoju primenu u stambenim i industrijskim pogonima za : ventilaciju, grejanje, prečišćavanje-filtraciju vazduha.Pogodni su za: pekare,staklenike,silose, kotlarnice.... PR- L ventilatori služe za transport čistog ili delimično prljavog vazduha , pri maksimalnoj temperaturi do 80 °C u standardnoj verziji , i 300 °C u specijalno konstruisanoj verziji.Serija podrazumeva verziju na direktan pogon (izvedba 4.) i verziju na remeni pogon (izvedba 1,9,12).

KONSTRUKCIJA :

- Kućište je izrađeno od čelika , zaštićeno od spoljašnjih uticaja Epoxy smolom.
- Aerodinamično oblikovana spoljna kupa je izrađena od čelika, zaštićena od spoljašnjih uticaja Epoxy smolom.
- Radno kolo sa unazad zakrivljenim lopaticama izrađeno od čelika i premazano Epoxy smolom.
Za veću brzinu predviđena je verzija 3.
- Mono blok sa kugličnim ležajima- izvedba 1-9-12, izrađen od livenog gvožđa,tako dizajniran radi boljeg samo podmazivanja.
- Trofazni asinhroni motor u skladu sa IEC34- IEC72- 89/392 EEC- 89/336 EEC- 73/23 EEC standardima, označenim formularom CE, IP 55 zaštitom klase E. Pogodan je za S1 režim (neprekidan rad pri stalnom opterećenju).

DODATNI DELOVI :

- Odvodni kanal kondenzata
- Kontrolna vrata
- Suprotan bok ulaznog otvora
- Suprotan bok izlaznog otvora
- Zaštita ulaznog otvora
- Ulazne fleksibilne veze
- Izlazne fleksibilne veze
- Kontrola lopatice ulaznog otvora
- Spoljašnji progušivač
- Antivibracioni okvir
- Remeni pogon za izvedbu 1-9-12, uključujući remenicu, kaiš i postolje motora.
- Štitnik kaiša motora.
- Osnovni horizontalni okvir za izvedbu 12
- Okretna potpora motora za izvedbu 9.

NA ZAHTEV :

- Model za transport vrelog gasa do temperature maksimalno 150°C. (PR-I / AT es 4)
- Model za transport vrelog gasa do temperature maksimalno 300°C. (PR-I / AT es 1-12)
- Model otporan na koroziju , izrađen sa kućištem od čelika,ulazni otvor i lopatice od nerđajućeg čelika AISI304 (PR-L / INOXA- A)
- Model otporan na varnice klase C u skladu sa tabelom NV105 ANIMA – COAER (PR-L / AS)
- Model otporan na eksploziju sa trofaznim ili monofaznim asinhronim motorom Eex- d IIB T3, u skladu sa internacionalnim standardima IEC34-IEC72 – IEC79 I 89/392 EEC – 89/336 EEC – 73/23 EEC , sa CESI sertifikatom,CE kvalifikovan, IP 55 zaštitom klase F (PR- L /ATEX)

GENERAL DESCRIPTION

The fans of the PR-L series find their main application in commercial and industrial plants of airconditioning, ventilation, heating and filtering; they can be used as well in industrial processing (baker ovens, spray booths, driers, boilers, silos, cooling systems, etc.). PR-L fans can convey clean or slightly dusty air with max. temperature of 80°C in standard configuration and 300°C in special construction. The series foresees direct drive version (execution 4) and belt drive version (execution 1, 9 and 12).

CONSTRUCTION

- Volute in steel sheet , protected against atmospheric agents by epoxy paint.
- Aerodynamically shaped inlet cone in steel sheet, protected against atmospheric agents by epoxy paint.
- Single inlet backward curved wheel with high efficiency, manufactured in steel sheet and epoxy painted. For higher speed, versions in class 3 are foreseen.
- Mono-block support with ball bearings, for execution 1 - 9 - 12, in cast iron, designed for easy lubrication.
- Three-phase asynchronous motor according to IEC34-IEC72 - 89/392 EEC - 89/336 EEC - 73/23 EEC standards, marked CE, IP55, class F. Suitable for S1 service (continuos running at constant load).

ACCESSORIES

- Condensation drain hole.
- Inspection door.
- Inlet counter-flange.
- Outlet counter-flange.
- Inlet protection guard.
- Inlet flexible connection.
- Outlet flexible connection.
- Inlet vane control.
- Outlet damper.
- Antivibration mounts.
- Belt drive kit for execution 1-9-12, including pulleys, belts and motor slides. Belt protection guard.
- Baseframe for execution 12.
- Swing motor support for execution 9.

UPON REQUEST

- High temperature version suitable for conveying hot gases, max 150°C (PR-L/AT es. 4).
- High temperature version suitable for conveying hot gases, max 300°C (PR-L/AT es. 1-12).
- Corrosion resistant version, manufactured with casing, inlet side and impeller in stainless steel AISI304 (PR-L/INOX-A).
- Spark proof version, class C, according to table NV105 ANIMA-COAER (PR-L/AS).
- Explosion proof version, with asynchronous three-phase or single-phase motor
EEx -d IIB T3, according to international standards IEC34-IEC72 - IEC79 and 89/392 EEC-89/336EEC-73/23 EEC, with CESI certificate and marked CE, IP55, class F (PR-L/ATEX).

UGLOVI ISPUŠTANJA / DISCHARGE ANGLES

PR-L

Rotacija Rotation RD								
Forma-Form	0	45	90	135	180(*)	225(*)	270	315
Rotacija Rotation LG								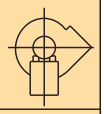
Visina-Height	E1				E2		E3	

Važno: Standardna orijentacija LG270°/Standard orientation LG270°
(*) Zahteva specijalnu konstrukciju / Request special construction

IZVEDBE / EXECUTIONS

PR-L

4: Radno kolo direktno spoljeno na motor fiksirano od strane nosača motora.

4: Impeller directly coupled to the motor supported by the motor support base.

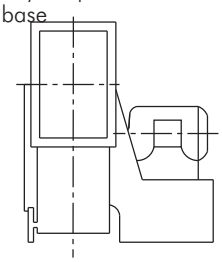

1: Aranžman za remeni pogon sa radnim kolom povezanim na osovinu, fiksiran od strane postolja motora.
1: Arrangement for belt drive with impeller directly coupled to the support shaft carried by the motor support base.

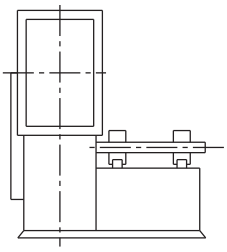

9: Isti slučaj kao kod primera 1. sa aranžmanom za motor montiranog sa strane i na postolje ventilatora.

9: same as execution 1 with arrangement for the motor assembled on the side of the support base.

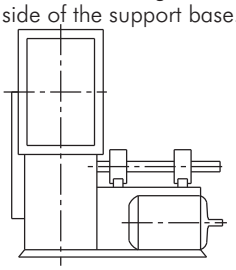

12: Isti slučaj kao kod primera 1. sa aranžmanom za lopaticu i motor montirane na donji deo postolja ventilatora
12: same as execution 1 with arrangement for fan and motor mounted on common basement

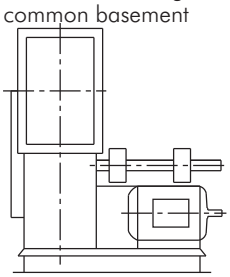

SEK.6

POZICIJA MOTORA / MOTOR POSITION

PR-L

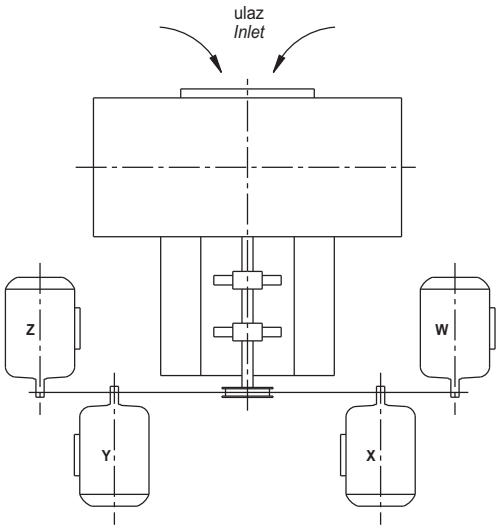

Frekvencija 50 Hz - Temperatura vazduha 15°C – Barometarski pritisak760 mm Hg – Specifična težina vazduha1,22 Kg/m3
Frequency 50Hz – Air temperature 15°C – Barometric pressure 760 mm Hg – Air specific weight 1,22 Kg/m3

PR-L 31 (aranžman 4/arrangement 4)

Tip Type	Model Model	U	P	Pm (kW)	In max (A)	IP/CL	Lp dB(A)
PR-L	314	T	4	0,18	0,65	55/F	57
PR-L	312	T	2	2,2	5,1	55/F	76

OPERATIVNI LIMIT / OPERATIONAL LIMITS

Tip Type	Model Model	Q max (m^3/h)	C max (m/s)	S (m^2)	Pd^2 (Kgm^2)	Mot. (Gr)
PR-L	314	2700	-	0,074	0,32	63
PR-L	312	5400	-	0,074	0,32	90

Maksimalni obrtaj u odnosu na temperaturu vazduha
Maximum rpm with regard to air temperature

Temperatura vazduha Air temperature	rpm klase/class 1	rpm klase/class 2	rpm klase/class 3	Konstrukcija Construction
0°C - 90° C	3100	3950	-	Standard
90°C - 200°C Es. 1-9-12	2800	3500	4500	vis.temperatura/High temperature (PR-L-AT)
200°C - 300° C Es. 1-9-12	2500	3150	4000	vis. temperatura/High temperature (PR-L-AT)

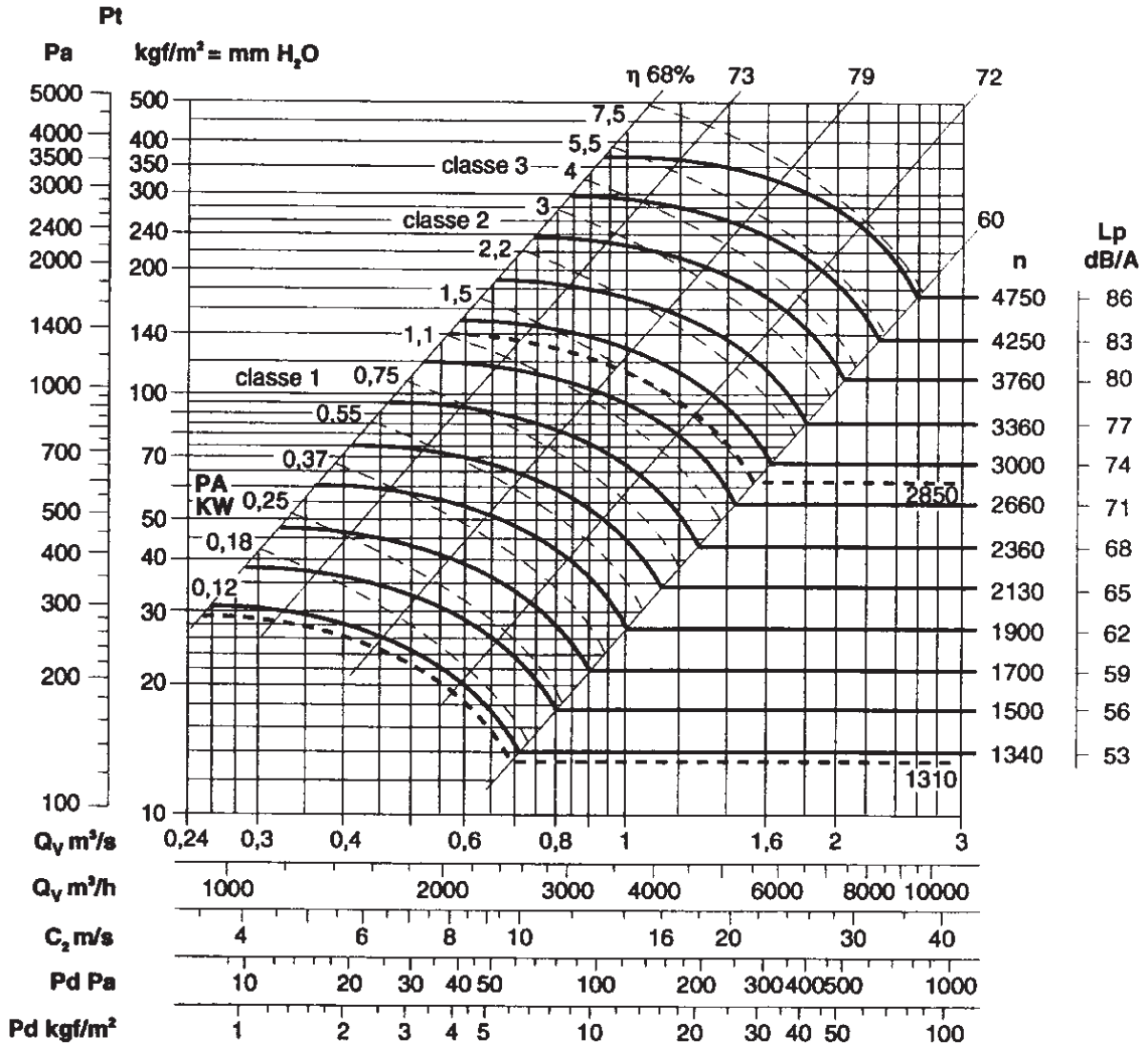

SEK. 6

Frekvencija 50 Hz - Temperatura vazduha 15°C – Barometarski pritisak760 mm Hg – Specifična težina vazduha1,22 Kg/m3
Frequency 50Hz – Air temperature 15°C – Barometric pressure 760 mm Hg – Air specific weight 1,22 Kg/m3

PR-L 35 (aranžman 4/arrangement 4)

Tip Type	Model Model	U	P	Pm (kW)	In max (A)	IP/CL	Lp dB(A)
PR-L	354	T	4	0,37	1,2	55/F	60
PR-L	352	T	2	3	6,0	55/F	79

OPERATIVNI LIMIT / OPERATIONAL LIMITS

Tip Type	Model Model	Q max (m^3/h)	C max (m/s)	S (m^2)	Pd^2 (Kgm^2)	Mot. (Gr)
PR-L	354	3850	11,6	0,092	0,52	71
PR-L	352	7650	23,0	0,092	0,52	100

Maksimalni obrtaj u odnosu na temperaturu vazduha
Maximum rpm with regard to air temperature

Temperatura vazduha Air temperature	rpm klase/class 1	rpm klase/class 2	rpm klase/class 3	Konstrukcija Construction
0°C - 90° C	2800	3500	4520	Standard
90°C - 200°C Es. 1-9-12	2500	3150	4000	vis.temperatura/High temperature (PR-L-AT)
200°C - 300° C Es. 1-9-12	2250	2800	3520	vis.temperatura/High temperature (PR-L-AT)

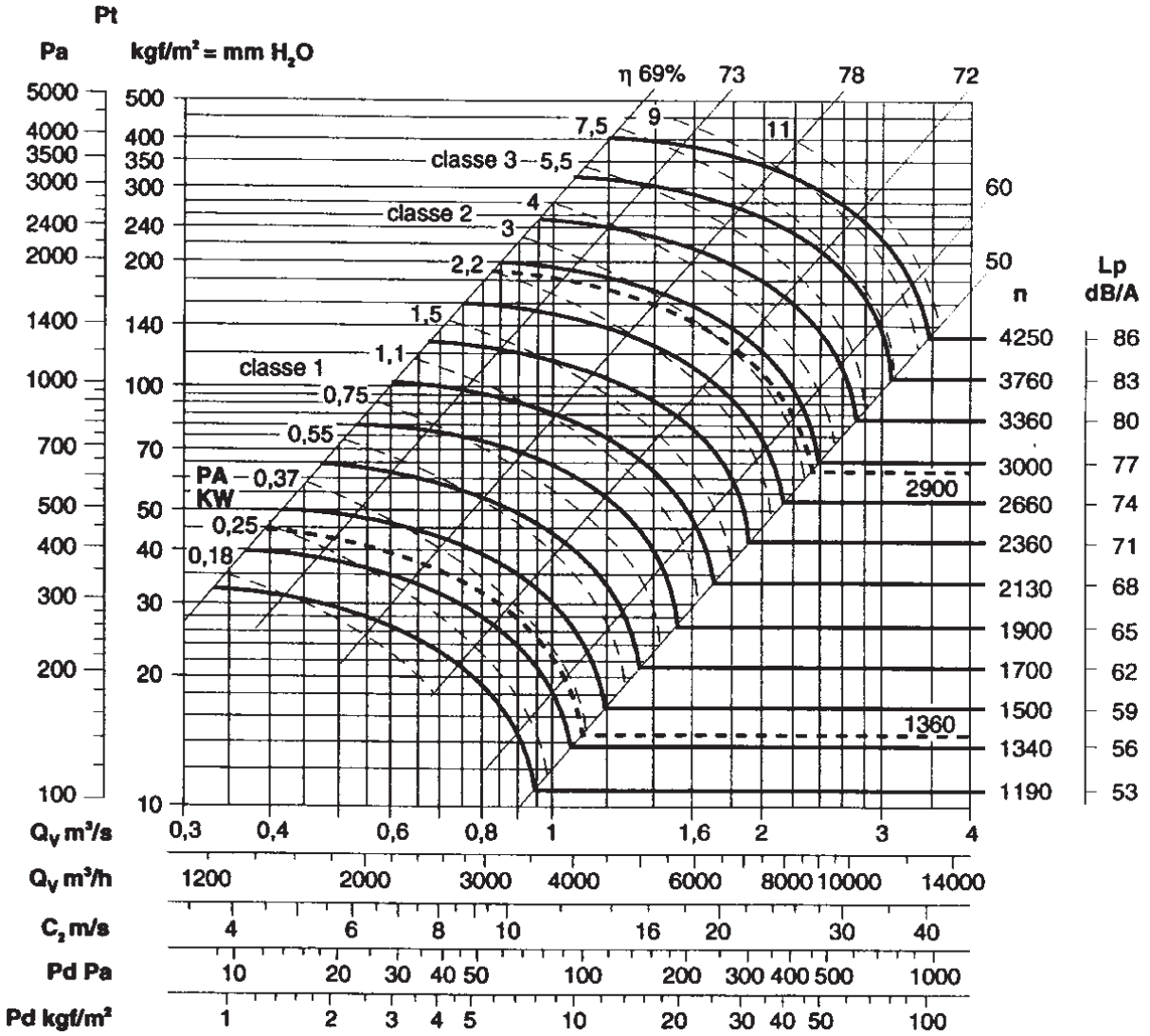

Frekvencija 50 Hz - Temperatura vazduha 15°C – Barometarski pritisak760 mm Hg – Specifična težina vazduha1,22 Kg/m3
Frequency 50Hz – Air temperature 15°C – Barometric pressure 760 mm Hg – Air specific weight 1,22 Kg/m3

PR-L 40 (aranžman 4/arrangement 4)

Tip Type	Model Model	U	P	Pm (kW)	In max (A)	IP/CL	Lp dB(A)
PR-L	404	T	4	0,55	1,6	55/F	64
PR-L	402	T	2	5,5	11,6	55/F	84

OPERATIVNI LIMIT / OPERATIONAL LIMITS

Tip Type	Model Model	Q max (m^3/h)	C max (m/s)	S (m^2)	Pd^2 (Kgm^2)	Mot. (Gr)
PR-L	404	5400	12,9	0,116	1,1	80
PR-L	402	12000	28,7	0,116	1,1	132

Maksimalni obrtaj u odnosu na temperaturu vazduha
Maximum rpm with regard to air temperature

Temperatura vazduha Air temperature	rpm klase/class 1	rpm klase/class 2	rpm klase/class 3	Konstrukcija Construction
0°C - 90° C	2840	3150	4000	Standard
90°C - 200°C Es. 1-9-12	2250	2800	3550	vis.temperatura/High temperature (PR-L-AT)
200°C - 300° C Es. 1-9-12	2000	2480	3170	vis.temperatura/High temperature (PR-L-AT)

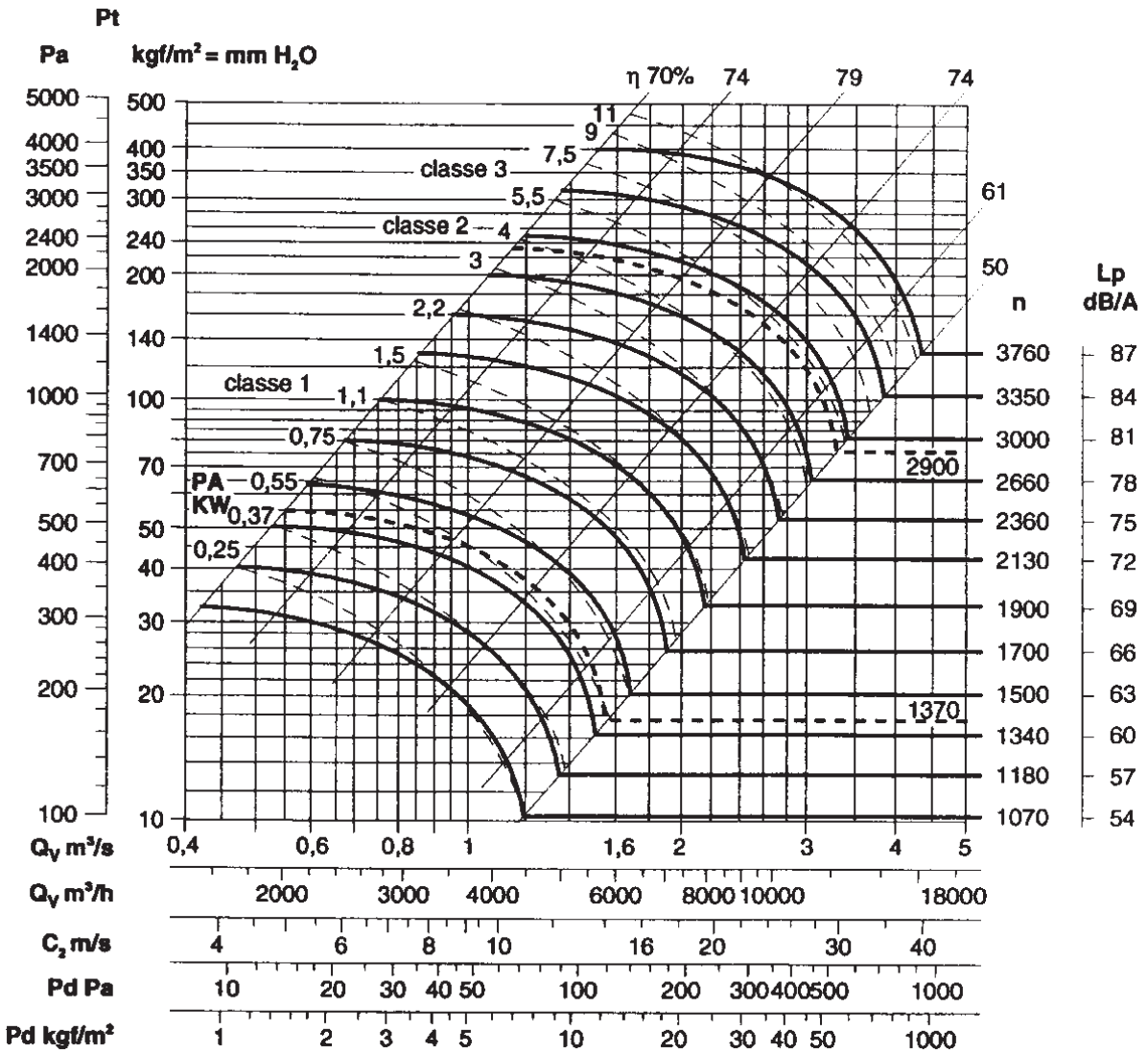

Frekvencija 50 Hz - Temperatura vazduha 15°C – Barometarski pritisak760 mm Hg – Specifična težina vazduha1,22 Kg/m3
Frequency 50Hz – Air temperature 15°C – Barometric pressure 760 mm Hg – Air specific weight 1,22 Kg/m3

PR-L 45 (aranžman 4/arrangement 4)

Tip Type	Model Model	U	P	Pm (kW)	In max (A)	IP/CL	Lp dB(A)
PR-L	454	T	4	1,1	2,8	55/F	67
PR-L	452	T	2	11,0	22	55/F	88

OPERATIVNI LIMIT/OPERATIONAL LIMITS

Tip Type	Model Model	Q max (m^3/h)	C max (m/s)	S (m^2)	Pd^2 (Kgm^2)	Mot. (Gr)
PR-L	454	014,	50,1	461,9	90	PR
L452	170	0032,	30,1	461,9	160	

Maksimalni obrtaj u odnosu na temperaturu vazduha
Maximum rpm with regard to air temperature

Temperatura vazduha Air temperature	rpm klase/class 1	rpm klase/class 2	rpm klase/class 3	Konstrukcija Construction
0°C - 90° C	2200	2800	3500	Standard
90°C - 200°C Es. 1-9-12	2000	2500	3150	vis. temperatura/High temperature (PR-L-AT)
200°C - 300° C Es. 1-9-12	1780	2250	2800	vis. temperatura/High temperature (PR-L-AT)

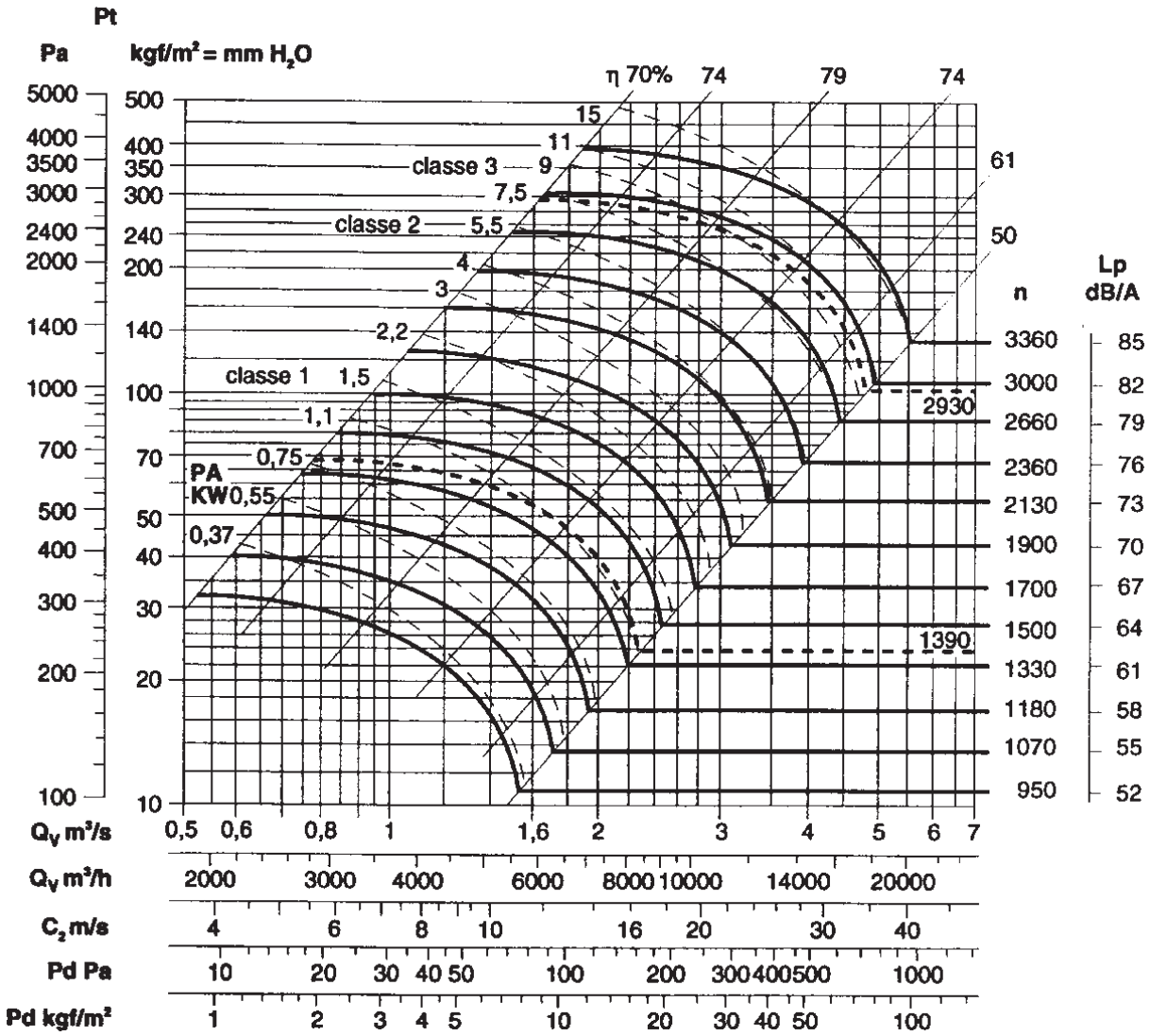

Frekvencija 50 Hz - Temperatura vazduha 15°C – Barometarski pritisak760 mm Hg – Specifična težina vazduha1,22 Kg/m3
Frequency 50Hz – Air temperature 15°C – Barometric pressure 760 mm Hg – Air specific weight 1,22 Kg/m3

PR-L 50 (aranžman 4/arrangement 4)

Tip Type	Model Model	U	P	Pm (kW)	In max (A)	IP/CL	Lp dB(A)
PR-L	506	T	6	0,55	1,8	55/F	59
PR-L	504	T	4	2,2	5,3	55/F	71
PR-L	502	T	2	18,5	34	55/F	92

OPERATIVNI LIMIT / OPERATIONAL LIMITS

Tip Type	Model Model	Q max (m^3/h)	C max (m/s)	S (m^2)	Pd^2 (Kgm^2)	Mot. (Gr)
PR-L	506	6850	10,4	0,183	3,1	80
PR-L	504	10800	16,4	0,183	3,1	100
PR-L	502	24200	36,7	0,183	3,1	160

Maksimalni obrtaj u odnosu na temperaturu vazduha
Maximum rpm with regard to air temperature

Temperatura vazduha Air temperature	rpm klase/class 1	rpm klase/class 2	rpm klase/class 3	Konstrukcija Construction
0°C - 90° C	2050	2500	3120	Standard
90°C - 200°C Es. 1-9-12	1800	2250	2800	vis. temperatura/High temperature (PR-L-AT)
200°C - 300° C Es. 1-9-12	1580	2000	2500	vis. temperatura/High temperature (PR-L-AT)

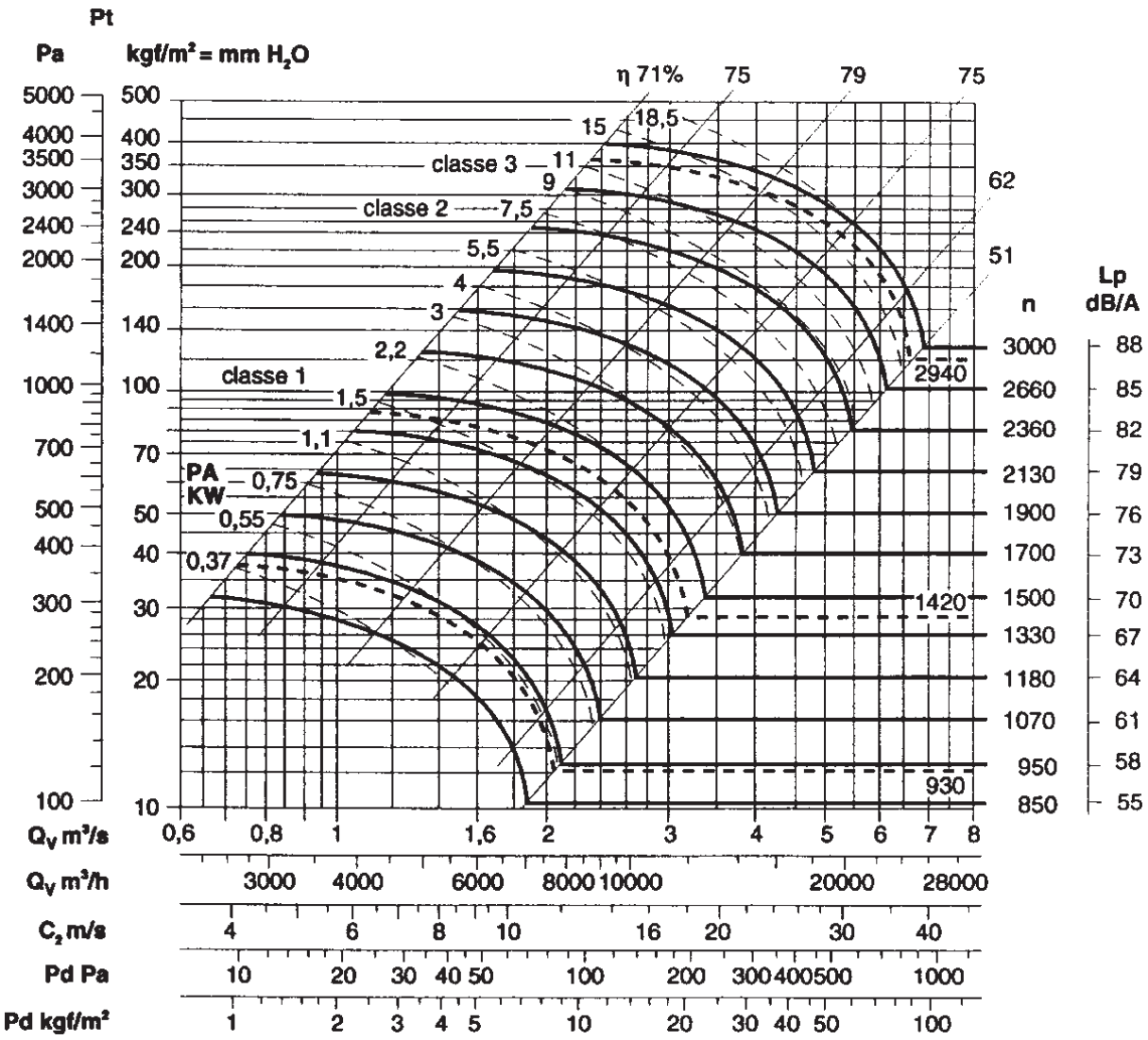

Frekvencija 50 Hz - Temperatura vazduha 15°C – Barometarski pritisak760 mm Hg – Specifična težina vazduha1,22 Kg/m3
Frequency 50Hz – Air temperature 15°C – Barometric pressure 760 mm Hg – Air specific weight 1,22 Kg/m3

PR-L 56 (aranžman 4/arrangement 4)

Tip Type	Model Model	U	P	Pm (kW)	In max (A)	IP/CL	Lp dB(A)
PR-L	566	T	6	1,1	3,4	55/F	62
PR-L	564	T	4	4,0	9,4	55/F	74

OPERATIVNI LIMIT / OPERATIONAL LIMITS

Tip Type	Model Model	Q max (m^3/h)	C max (m/s)	S (m^2)	Pd^2 (Kgm^2)	Mot. (Gr)
PR-L	566	9500	11,5	0,230	5,5	90
PR-L	564	17000	20,5	0,230	5,5	112

Maksimalni obrtaj u odnosu na temperaturu vazduha
Maximum rpm with regard to air temperature

Temperatura vazduha Air temperature	rpm klase/class 1	rpm klase/class 2	rpm klase/class 3	Konstrukcija Construction
0°C - 90° C	1850	2250	2800	Standard
90°C - 200°C Es. 1-9-12	1600	2000	2500	vis. temperatura/High temperature (PR-L-AT)
200°C - 300° C Es. 1-9-12	1400	1800	2200	vis. temperatura/High temperature (PR-L-AT)

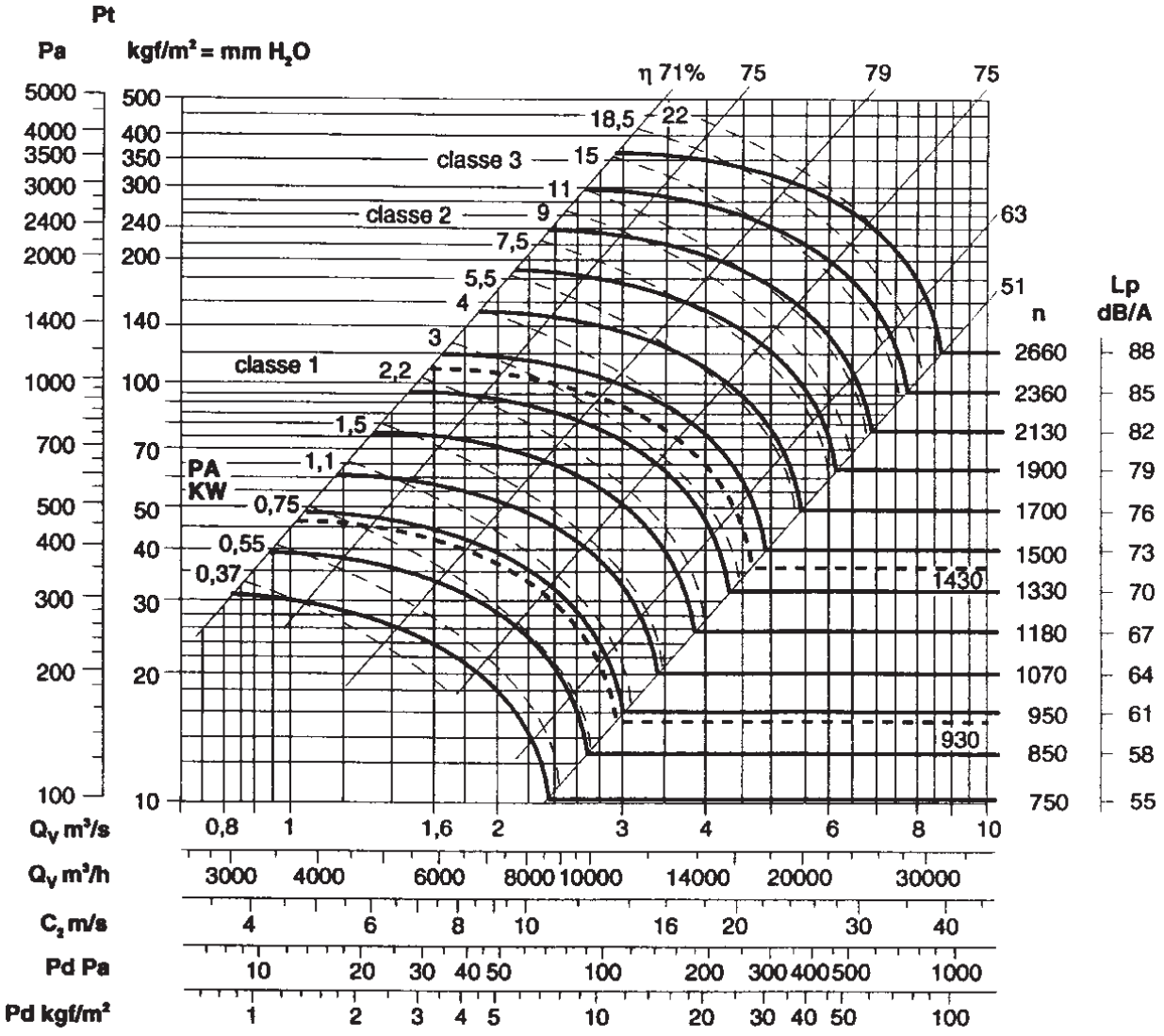

Frekvencija 50 Hz - Temperatura vazduha 15°C – Barometarski pritisak760 mm Hg – Specifična težina vazduha1,22 Kg/m3
Frequency 50Hz – Air temperature 15°C – Barometric pressure 760 mm Hg – Air specific weight 1,22 Kg/m3

PR-L 63 (aranžman 4/arrangement 4)

Tip Type	Model Model	U	P	Pm (kW)	In max (A)	IP/CL	Lp dB(A)
PR-L	636	T	6	2,2	5,3	55/F	68
PR-L	634	T	4	7,5	15,4	55/F	78

OPERATIVNI LIMIT / OPERATIONAL LIMITS

Tip Type	Model Model	Q max (m^3/h)	C max (m/s)	S (m^2)	Pd^2 (Kgm^2)	Mot. (Gr)
PR-L	636	15300	14,7	0,289	8,7	112
PR-L	634	24200	23,2	0,289	8,7	132

Maksimalni obrtaj u odnosu na temperaturu vazduha
Maximum rpm with regard to air temperature

Temperatura vazduha Air temperature	rpm klase/class 1	rpm klase/class 2	rpm klase/class 3	Konstrukcija Construction
0°C - 90° C	1600	2000	2500	Standard
90°C - 200°C Es. 1-9-12	1390	1800	2270	vis.. temperatura/High temperature (PR-L-AT)
200°C - 300° C Es. 1-9-12	1250	1600	2000	vis.. temperatura/High temperature (PR-L-AT)

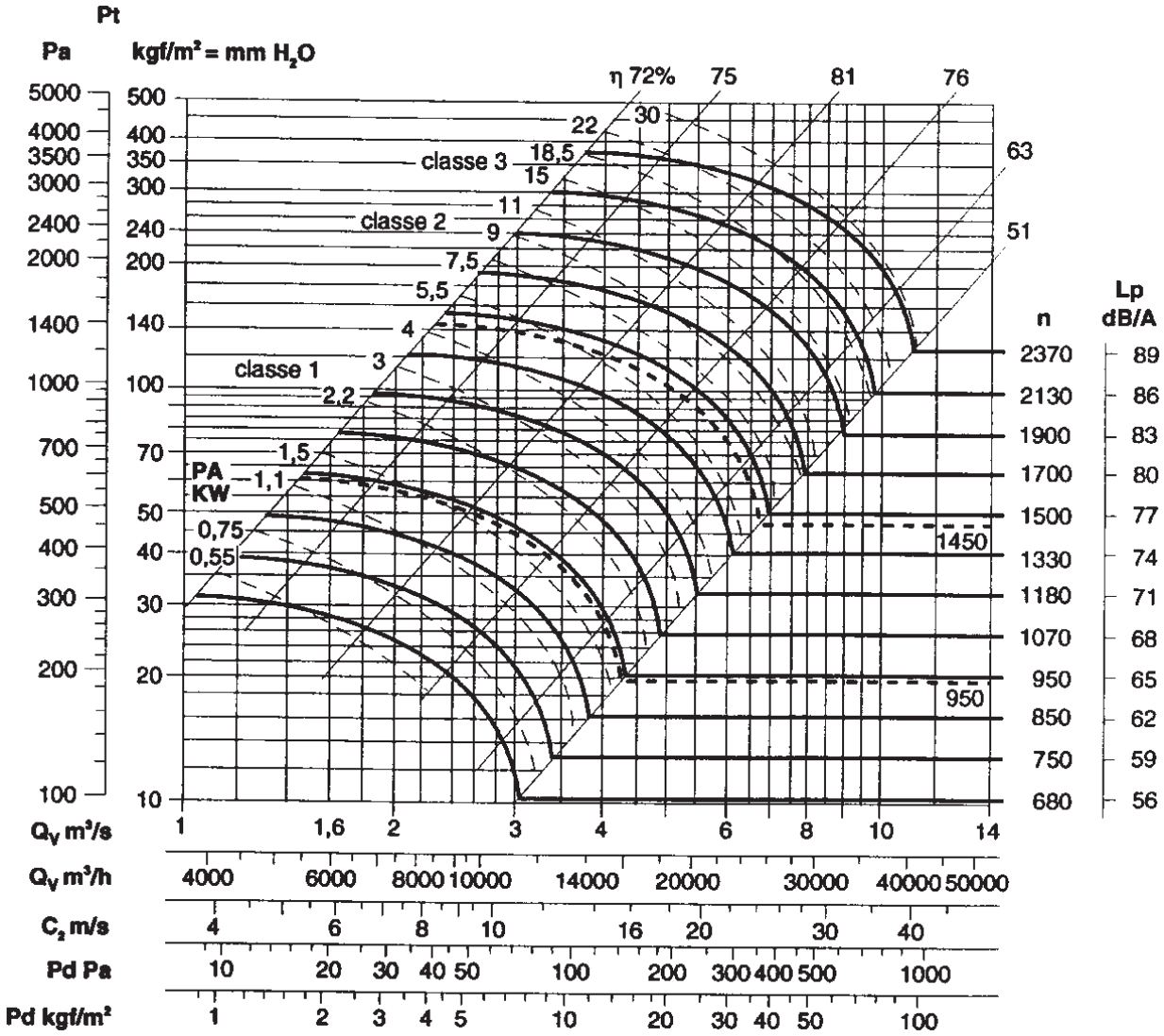

Frekvencija 50 Hz - Temperatura vazduha 15°C – Barometarski pritisak760 mm Hg – Specifična težina vazduha1,22 Kg/m3
Frequency 50Hz – Air temperature 15°C – Barometric pressure 760 mm Hg – Air specific weight 1,22 Kg/m3

PR-L 71 (aranžman 4/arrangement 4)

Tip Type	Model Model	U	P	Pm (kW)	In max (A)	IP/CL	Lp dB(A)
PR-L	716	T	6	4,0	10,0	55/F	72
PR-L	714	T	4	15	29,0	55/F	82

OPERATIVNI LIMIT / OPERATIONAL LIMITS

Tip Type	Model Model	Q max (m^3/h)	C max (m/s)	S (m^2)	Pd^2 (Kgm^2)	Mot. (Gr)
PR-L	716	21600	16,5	0,362	15,5	132
PR-L	714	34200	26,2	0,362	15,5	160

Maksimalni obrtaj u odnosu na temperaturu vazduha
Maximum rpm with regard to air temperature

Temperatura vazduha Air temperature	rpm klase/class 1	rpm klase/class 2	rpm klase/class 3	Konstrukcija Construction
0°C - 90° C	1450	1800	2250	Standard
90°C - 200°C Es. 1-9-12	1250	1600	2000	vis. temperatura/High temperature (PR-L-AT)
200°C - 300° C Es. 1-9-12	1120	1410	1810	vis. temperatura/High temperature (PR-L-AT)

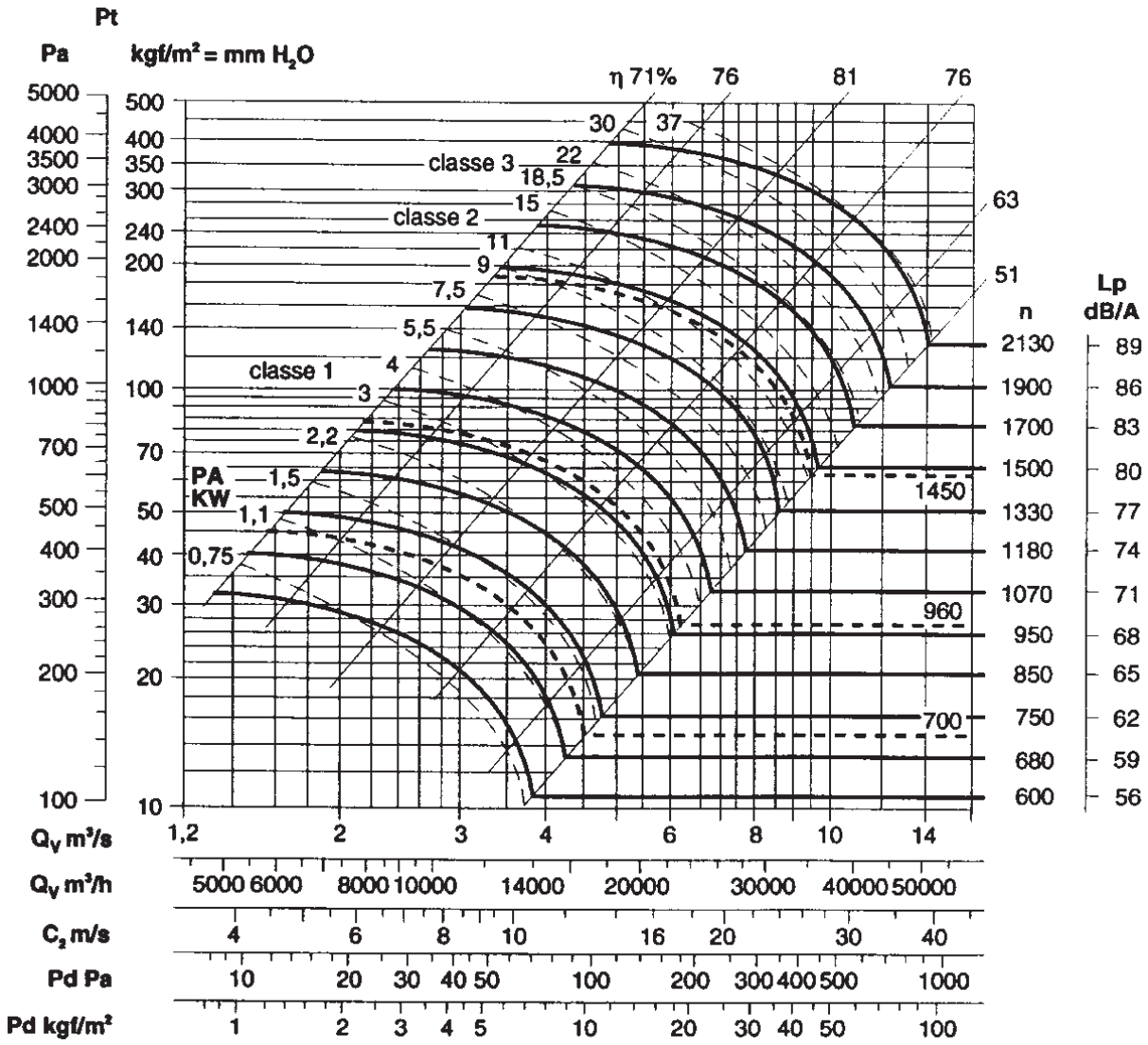

Frekvencija 50 Hz - Temperatura vazduha 15°C – Barometarski pritisak760 mm Hg – Specifična težina vazduha1,22 Kg/m3
Frequency 50Hz – Air temperature 15°C – Barometric pressure 760 mm Hg – Air specific weight 1,22 Kg/m3

PR-L 80 (aranžman 4/arrangement 4)

Tip Type	Model Model	U	P	Pm (kW)	In max (A)	IP/CL	Lp dB(A)
PR-L	806	T	6	7,5	17,0	55/F	75
PR-L	804	T	4	22	42,0	55/F	85

OPERATIVNI LIMIT / OPERATIONAL LIMITS

Tip Type	Model Model	Q max (m^3/h)	C max (m/s)	S (m^2)	Pd^2 (Kgm^2)	Mot. (Gr)
PR-L	806	30600	18,7	0,455	27	160
PR-L	804	47500	28,9	0,455	27	180

Maksimalni obrtaj u odnosu na temperaturu vazduha
Maximum rpm with regard to air temperature

Temperatura vazduha Air temperature	rpm klase/class 1	rpm klase/class 2	rpm klase/class 3	Konstrukcija Construction
0°C - 90° C	1240	1600	2000	Standard
90°C - 200°C Es. 1-9-12	1120	1400	1790	vis. temperatura/High temperature (PR-L-AT)
200°C - 300° C Es. 1-9-12	1000	1240	1600	vis. temperatura/High temperature (PR-L-AT)

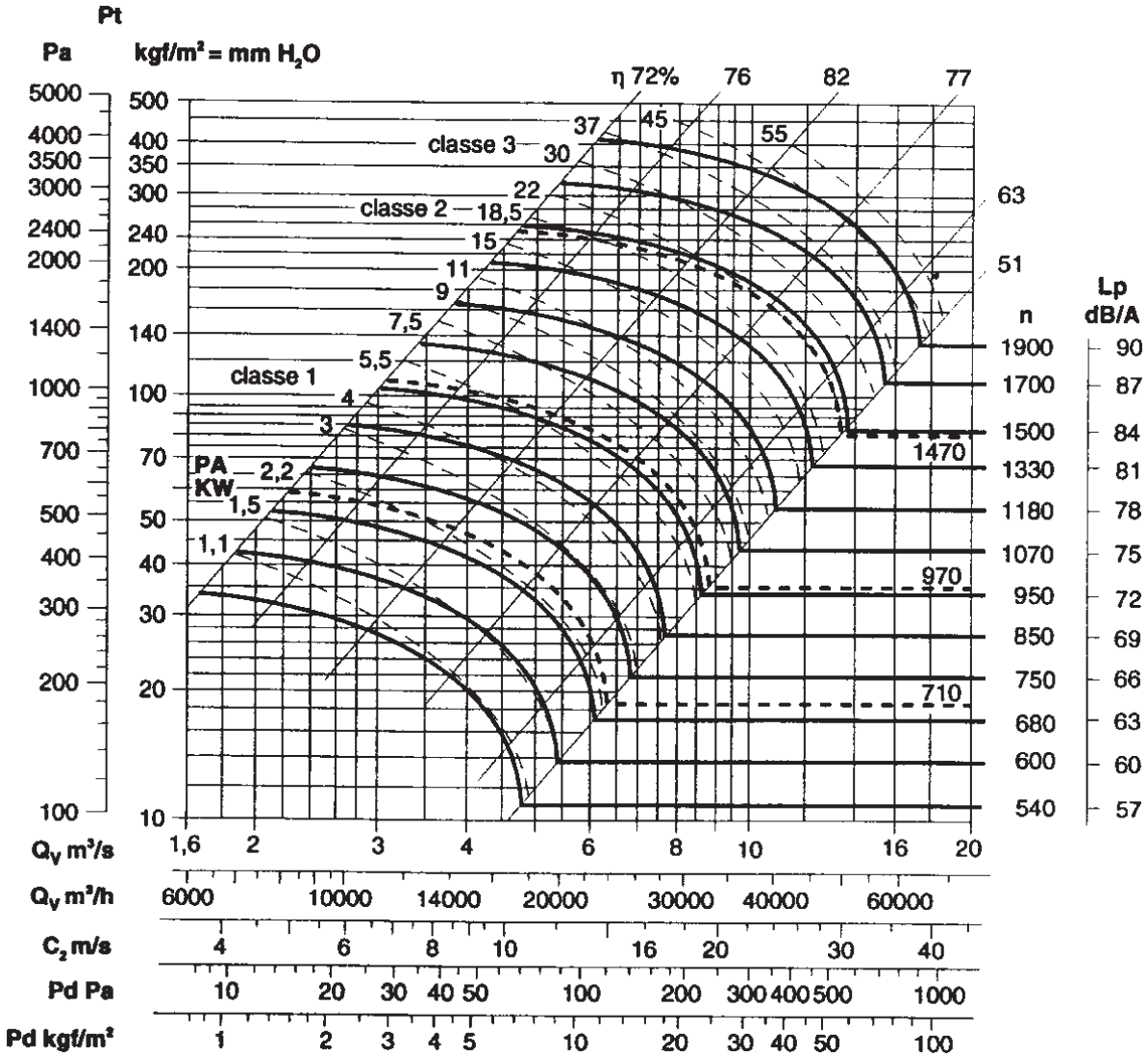

Frekvencija 50 Hz - Temperatura vazduha 15°C – Barometarski pritisak760 mm Hg – Specifična težina vazduha1,22 Kg/m3
Frequency 50Hz – Air temperature 15°C – Barometric pressure 760 mm Hg – Air specific weight 1,22 Kg/m3

PR-L 90 (aranžman 4/arrangement 4)

Tip Type	Model Model	U	P	Pm (kW)	In max (A)	IP/CL	Lp dB(A)
PR-L	906	T	6	15	30,0	55/F	78
PR-L	904	T	4	45	82,6	55/F	88

OPERATIVNI LIMIT / OPERATIONAL LIMITS

Tip Type	Model Model	Q max (m^3/h)	C max (m/s)	S (m^2)	Pd^2 (Kgm^2)	Mot. (Gr)
PR-L	906	42500	20,6	0,573	43	180
PR-L	904	68500	33,2	0,573	43	225

Maksimalni obrtaj u odnosu na temperaturu vazduha
Maximum rpm with regard to air temperature

Temperatura vazduha Air temperature	rpm klase/class 1	rpm klase/class 2	rpm klase/class 3	Konstrukcija Construction
0°C - 90° C	1130	1400	1810	Standard
90°C - 200°C Es. 1-9-12	1000	1250	1600	vis. temperatura/High temperature (PR-L-AT)
200°C - 300° C Es. 1-9-12	910	1120	1400	vis. temperatura/High temperature (PR-L-AT)

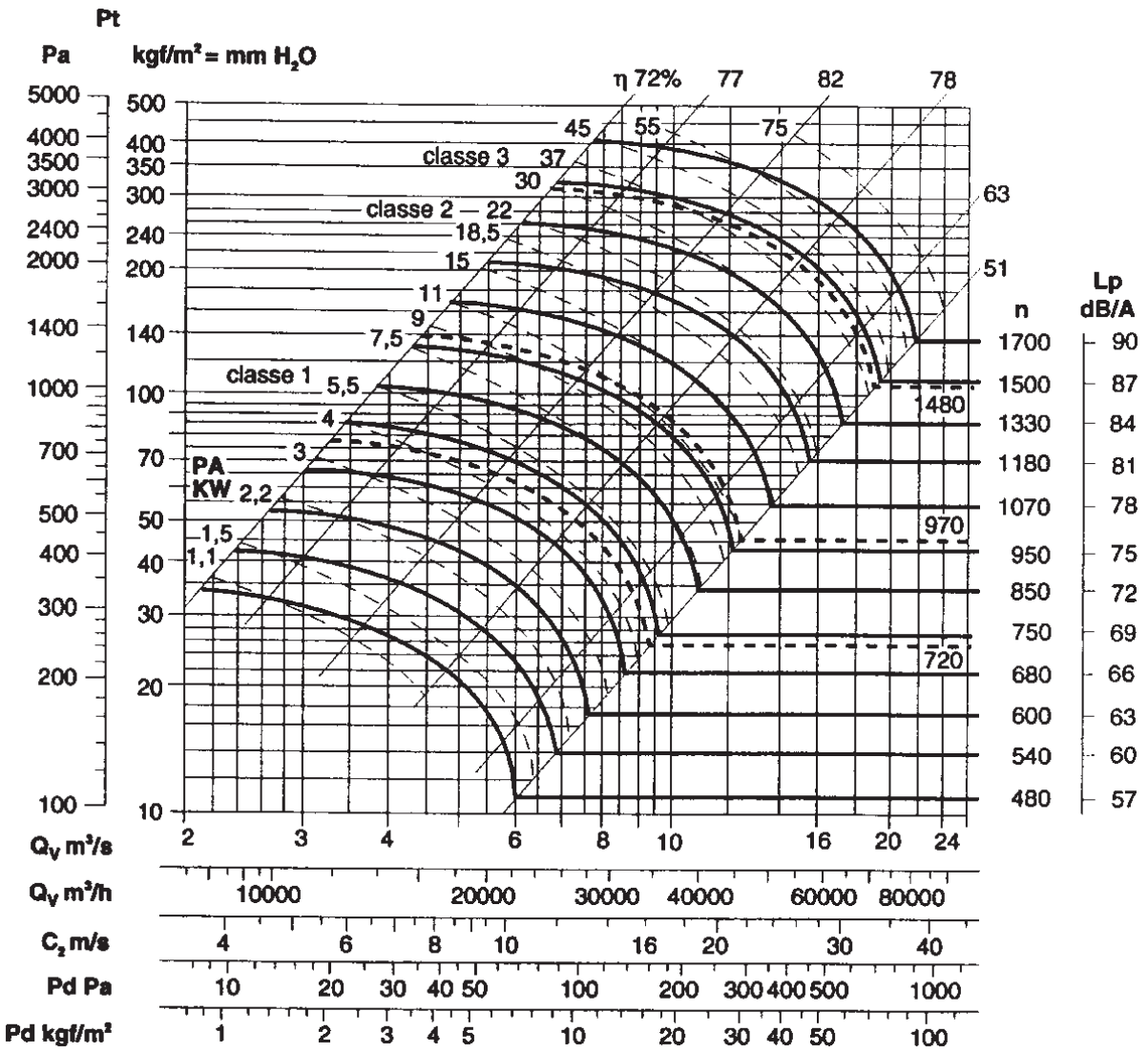

Frekvencija 50 Hz - Temperatura vazduha 15°C – Barometarski pritisak760 mm Hg – Specifična težina vazduha1,22 Kg/m3
Frequency 50Hz – Air temperature 15°C – Barometric pressure 760 mm Hg – Air specific weight 1,22 Kg/m3

PR-L 100 (aranžman 4/arrangement 4)

Tip Type	Model Model	U	P	Pm (kW)	In max (A)	IP/CL	Lp dB(A)
PR-L	1006	T	6	22	42,5	55/F	82
PR-L	1004	T	4	75	127	55/F	93

OPERATIVNI LIMIT / OPERATIONAL LIMITS

Tip Type	Model Model	Q max (m^3/h)	C max (m/s)	S (m^2)	Pd^2 (Kgm^2)	Mot. (Gr)
PR-L	1006	61000	23,5	0,720	78	200
PR-L	1004	95400	36,8	0,720	78	280

Maksimalni obrtaj u odnosu na temperaturu vazduha
Maximum rpm with regard to air temperature

Temperatura vazduha Air temperature	rpm klase/class 1	rpm klase/class 2	rpm klase/class 3	Konstrukcija Construction
0°C - 90° C	1000	1240	1600	Standard
90°C - 200°C Es. 1-9-12	900	1120	1400	vis. temperatura/High temperature (PR-L-AT)
200°C - 300° C Es. 1-9-12	800	1000	1240	vis. temperatura/High temperature (PR-L-AT)

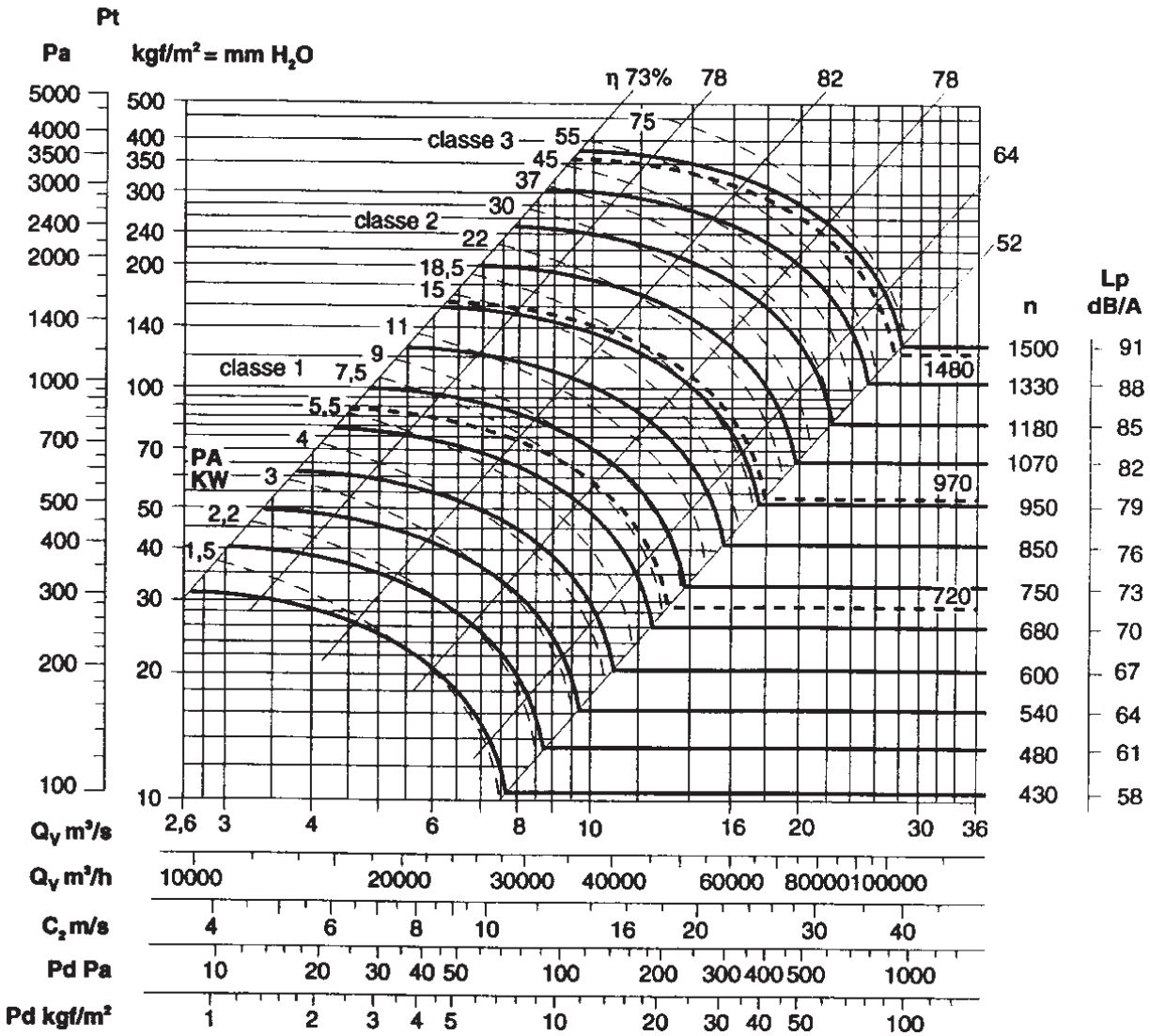

ARANŽMAN 4/ ARRANGEMENT 4

Tip/Type	A	B	C	D	E* E1 0°+135°	E* E2 180°+225°	E* E3 270°+315°	F
PR-L 31	302	225	196	258	400	225	400	117
PR-L 35	345	255	216	290	450	255	450	130
PR-L 40	370	285	245	315	500	285	500	147
PR-L 45	495	320	275	355	560	320	560	163
PR-L 50	472	360	303	400	600	360	600	183
PR-L 56	540	400	332	456	670	400	670	205
PR-L 63	602	450	373	510	755	450	750	230
PR-L 71	660	500	427	566	850	500	850	257
PR-L 80	752	560	478	640	950	560	950	287
PR-L 90	840	630	538	720	850	630	1060	322
PR-L 100	946	710	607	813	950	710	1180	360

Dimenzije u mm/Dimensions in mm

Važno : Videti uglove ispuštanja na str. 7 sez. 6
See discharge angle schedule pag. 7 sez. 6

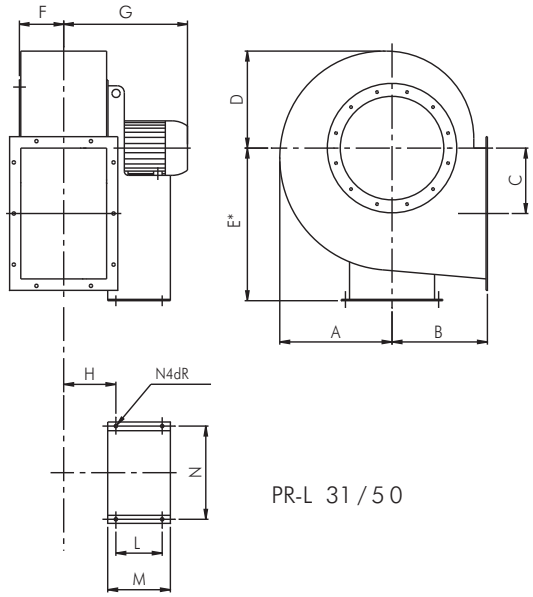

PR-L 31 / 50

SEK. 6

Tip/Type	Pol/Poles	G	H	I	L	M	N	P	dR	kg
PR-L 31	2	384	172	-	133	205	234	-	10	52
"	4	300	162	-	86	145	184	-	10	42
PR-L 35	2	468	161	-	197	250	289	-	12	80
"	4	338	176	-	121	180	203	-	10	65
PR-L 40	2	546	187	-	237	300	337	-	12	108
"	4	374	192	-	121	180	203	-	10	75
PR-L 45	2	700	215	-	337	415	395	-	14	160
"	4	430	220	-	133	205	234	-	10	94
PR-L 50	2	719	235	-	337	415	395	-	14	196
"	4	521	215	-	197	250	289	-	12	129
"	6	411	230	-	121	180	203	-	10	116
PR-L 56	4	542	236	232	197	711	289	632	12	146
"	6	472	261	232	133	666	234	632	10	133
PR-L 63	4	629	271	256	237	810	337	702	12	204
"	6	567	271	256	197	760	289	702	12	179
PR-L 71	4	792	319	287	316	988	772	772	20	326
"	6	656	319	287	201	873	772	772	20	286
PR-L 80	4	918	350	318	361	1095	862	862	20	418
"	6	843	350	318	316	1050	862	862	20	368
PR-L 90	4	1009	379	352	441	1258	962	962	20	650
"	6	932	379	352	361	1178	962	962	20	499
PR-L 100	4	1048	413	390	590	1505	1056	1056	20	941
"	6	971	413	390	400	1315	1056	1056	20	716

Dimenzije u mm/Dimensions in mm

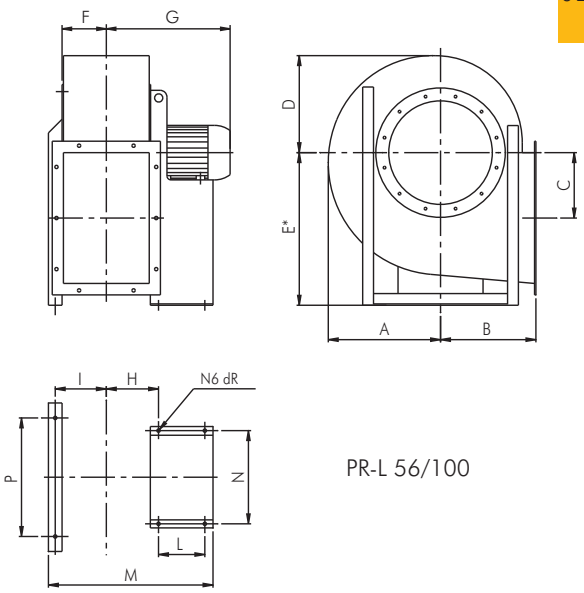

PR-L 56/100

VAŽNO :PR- L 56/80 dozvoljava modifikaciju ispusnog ugla
PR- L 90/100 ne dozvoljava modifikaciju ispusnog ugla

Note: PR-L 56/80 allow the modification of discharge angle
PR-L 90/100 do not allow the modification of discharge angle

ULAZNI OTVOR / INLET

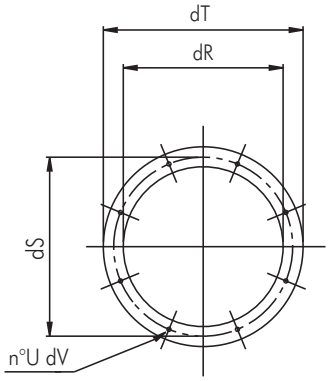

Tip/Type	dR	dS	dT	U	dV
31	320	366	400	8	10
35	360	405	440	8	10
40	405	448	485	8	10
45	455	497	535	8	10
50	505	551	585	8	10
56	565	629	665	16	10
63	635	698	735	16	12
71	715	775	815	16	12
80	805	861	905	16	12
90	905	958	1005	16	12
100	1007	1067	1107	16	12

Dimenzije u mm/Dimensions in mm

IZLAZNI OTVOR / OUTLET

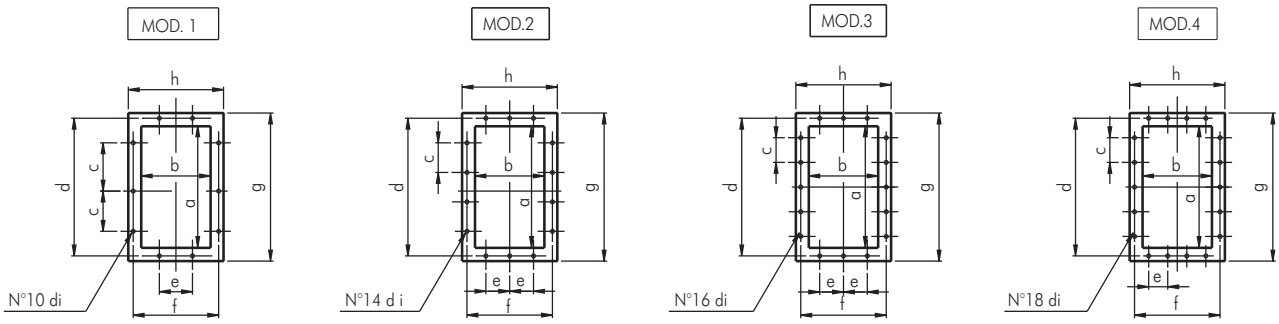

Tip/Type	a	b	c	d	e	f	g	h	di	MOD.
31	322	229	125	366	125	273	402	309	12	1
35	361	256	125	405	125	300	441	336	12	1
40	404	288	125	448	125	332	484	368	12	2
45	453	322	125	497	125	366	533	402	12	2
50	507	361	125	551	125	405	587	441	12	2
56	569	404	160	629	160	464	669	504	14	2
63	638	453	160	698	160	513	738	553	14	2
71	715	507	160	775	160	567	815	607	14	3
80	801	569	200	871	200	639	921	689	14	2
90	898	638	200	968	200	708	1018	758	14	4
100	1007	715	200	1077	200	785	1127	835	14	4

Dimenzije u mm/Dimensions in mm

ARANŽMAN 1/ ARRANGEMENT

Tip/Type	A	B	C	D	E* E1 0°+135°	E2 180°+225°	E3 270°+315°	F	G
PR-L 31	302	225	196	258	400	225	400	117	527
PR-L 35	345	255	216	290	450	255	450	130	686
PR-L 40	370	285	245	315	500	285	500	147	722
PR-L 45	495	320	275	355	560	320	560	163	739
PR-L 50	472	360	303	400	600	360	600	183	864
PR-L 56	540	400	332	456	670	400	670	205	922
PR-L 63	602	450	373	510	755	450	750	230	953
PR-L 71	660	500	427	566	850	500	850	257	1026
PR-L 80	752	560	478	640	950	560	950	287	1057
PR-L 90	840	630	538	720	850	630	1060	322	1092
PR-L 100	946	710	607	813	950	710	1180	360	1252

Dimenzije u mm/Dimensions in mm

Važno : Videti uglove ispuštanja na str. 7 sez. 6

See discharge angle schedule pag. 7 sez. 6

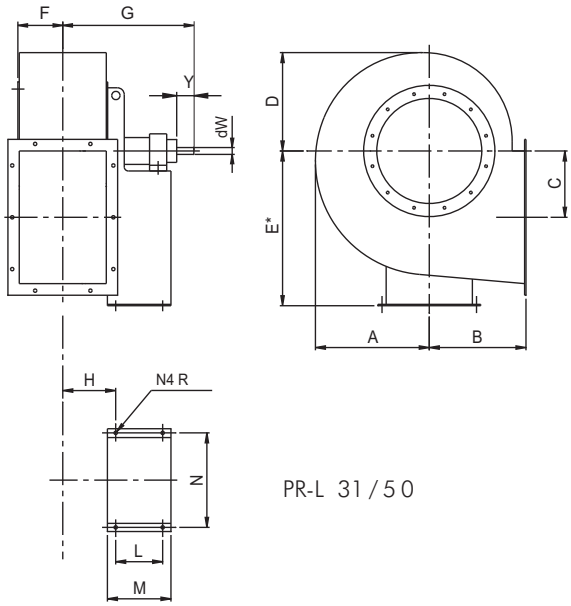

PR-L 31/50

SEK.6

Tip/Type	H	I	L	M	N	P	dR	Osovina/Shaft dW	Y	kg
PR-L 31	157	-	284	347	288	-	12	24	50	46
PR-L 35	181	-	407	485	355	-	14	28	60	72
PR-L 40	197	-	407	485	355	-	14	38	80	85
PR-L 45	215	-	407	485	355	-	14	38	80	100
PR-L 50	235	-	477	560	364	-	17	42	110	142
PR-L 56	256	232	477	1021	632	632	17	48	110	178
PR-L 63	280	257	477	1070	702	702	17	48	110	230
PR-L 71	313	287	551	1217	772	772	19	48	110	280
PR-L 80	344	318	551	1299	862	862	19	55	110	352
PR-L 90	379	352	551	1360	962	962	19	55	110	435
PR-L 100	412	391	607	1522	1056	1056	19	65	140	570

Dimenzije u mm/Dimensions in mm

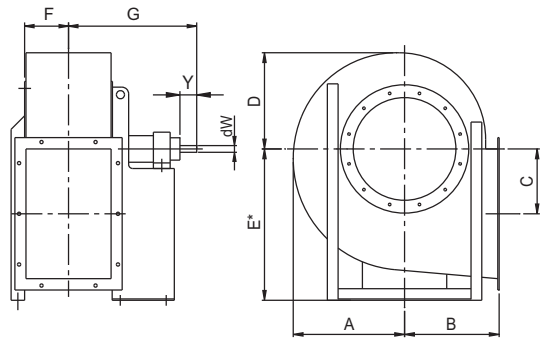

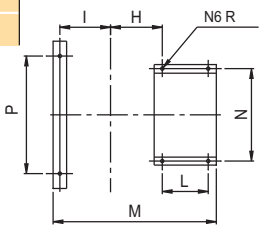

PR-L 56/100

VAŽNO: PR-L 31/80 dozvoljava modifikaciju ispusnog ugla
PR-L 90/100 ne dozvoljava modifikaciju ispusnog ugla
Note: PR-L 31/80 allow the modification of discharge angle
PR-L 90/100 do not allow the modification of discharge angle

ULAZNI OTVOR / INLET

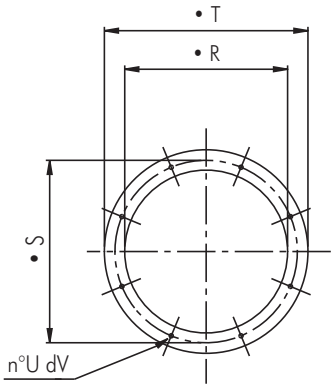

Tip/Type	dR	dS	dT	U	dV
31	320	366	400	8	10
35	360	405	440	8	10
40	405	448	485	8	10
45	455	497	535	8	10
50	505	551	585	8	10
56	565	629	665	16	10
63	635	698	735	16	12
71	715	775	815	16	12
80	805	861	905	16	12
90	905	958	1005	16	12
100	1007	1067	1107	16	12

Dimenzije u mm/Dimensions in mm

SEK. 6

IZLAZNI OTVOR / OUTLET

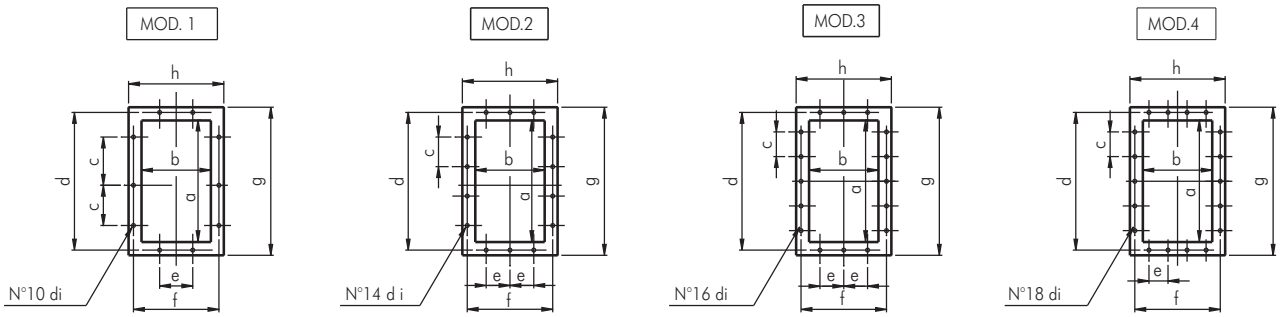

Tip/Type	a	b	c	d	e	f	g	h	di	MOD.
31	322	229	125	366	125	273	402	309	12	1
35	361	256	125	405	125	300	441	336	12	1
40	404	288	125	448	125	332	484	368	12	2
45	453	322	125	497	125	366	533	402	12	2
50	507	361	125	551	125	405	587	441	12	2
56	569	404	160	629	160	464	669	504	14	2
63	638	453	160	698	160	513	738	553	14	2
71	715	507	160	775	160	567	815	607	14	3
80	801	569	200	871	200	639	921	689	14	2
90	898	638	200	968	200	708	1018	758	14	4
100	1007	715	200	1077	200	785	1127	835	14	4

Dimenzije u mm/Dimensions in mm

LEGENDA/LEGEND

PS = Statički pritisak (mm/H2O)
PD = Dinamički pritisak (mm/H2O)
Pt = Totalni pritisak (mm/H2O)
Q = Transport vazduha (m3/H2O)
U = Nominalna voltaža (V)
M = Nominalna voltaža i frekvencija mono faze (230 V–50 Hz)
T = Nominalna voltaža i frekvencija tro faze (400 V – 50 Hz)
Rpm = Broj obrataja motora
Pm = Snaga morora (KW)
In = Nominalna apsorbna veličina (A)
IP = Mehanička zaštita motora
CI = Kategorija izolacije motora
S = Spoljašnja površina (m2)
C = Brzina vazduha (m/s)
Pd2 = Inertni moment (Kgm2)
Lp = Nivo pritiska zvuka (dB)
Lw = Nivo jačine zvuka (dB)
Reg. = Regulator brzine
P = n° Polovi
2 pola = 3000 obrtaja
4 pola = 1500 obrtaja
6 pola = 1000 obrtaja
8 pola = 750 obrtaja

Pažnja ! Nivo pritiska zvuka se meri u slobodnom prostoru od 1.5 m razmaka od centra ventilatora , u bilo kom pravcu sa unutrašnjom i spoljašnjom stranom spoljenom na cevni sistem.

Značajno ! Buka samog ventilatora će biti veća , ukoliko se ne meri u slobodnom prostoru.

Ostvarljivi standardi : testiranje karakteristika je vršeno u skladu sa DIN24163 standardom, testiranje akustike je u skladu sa DIN45635T38 standardom.

Ps = Static pressure (mm/H_2O)
Pd = Dynamic pressure (mm/H_2O)
Pt = Total pressure (mm/H_2O)
Q = Air delivery (m^3/h)
U = Rated voltage (V)
M = Rated voltage and frequency single-phase (230V-50Hz)
T = Rated voltage and frequency three-phase (400V-50Hz)
rpm = Nominal motor speed
Pm = Installed motor power (kW)
In = Nominal absorbed current (A)
IP = Motor mechanical protection
CI = Motor Insulation class
S = Outlet area (m^2)
C = Air velocity (m/s)
Pd2 = Impeller inertia moment (Kgm^2)
Lp = Sound pressure level (dB)
Lw = Sound power level (dB)
Reg. = Speed regulator
P = n° Poles
2 poles = 3000 nominal rpm
4 poles = 1500 nominal rpm
6 poles = 1000 nominal rpm
8 poles = 750 nominal rpm

Attention: the sound pressure level is measured in free field at 1,5 m distance from the fan centre, in any direction, with inlet and outlet sides connected to duct.

Note: when selecting it is necessary to keep in mind that the noise of the fan, if not measured in free field, will be higher than the shown values.

Standards achieved: Performance tests according to DIN24163 standard - Acoustic tests according to DIN45635T38 standard

FAKTORI PRETVARANJA / CONVERSION FACTORS

SEK. 6

Snaga/Power

	W	kW	CV
W	1	0,001	0,00136
kW	1000	1	1,36
CV	735,5	0,7355	1

Pritisak/Pressure

	Pa	mm/H_2O	in.WG
Pa	1	0,101972	0,00401
mm/H_2O	9,807	1	0,0394
in.WG	249,09	25,4	1

Protok vazduha / Flow rate

	m^3/s	m^3/h	cfm
m^3/s	1	3600	2118,88
m^3/h	0,0002778	1	0,5886
cfm	0,0004719	1,6990	1

KAKO NARUČITI / HOW TO ORDER

ARANŽMAN 1 / ARRANGEMENT 1

Primer / Example:	Tip / Type	Model / Model	Ispuštanje / Discharge	Ugao / Angle	rpm	Aranžman / Arrangement
	PR-L	50	LG	270°	1250	Es.1

ARANŽMAN / 4

Primer / Example:	Tip / Type	Mode l/ Model	Voltaža / Voltage	Ispuštanje / Discharge	Ugao / Angle	Aranžman / Arrangement
	PR-L	504	T	LG	270°	Es.4

ARANŽMAN / 9 i 12

Primer / Example:	Tip / Type	Model / Model	Voltaža / Voltage	Ispuštanje / Discharge	Ugao / Angle	Pozicija motora / Motor position	rpm	Aranžman / Arrangement
	PR-L	56	T	LG	270°	Z	1000 rpm	Es.9

Centrifugalni ventilatori sa unazad zakrivljenim lopaticama
Backward curved blade centrifugal fans

Popravljiv faktor "K" za definisanje gustine vazduha u stanju različitog od standarda (15°C, 760 mm. Hg)

"K" correcting factor to define air density in conditions differing from standard (15°C, 760 mm. Hg)

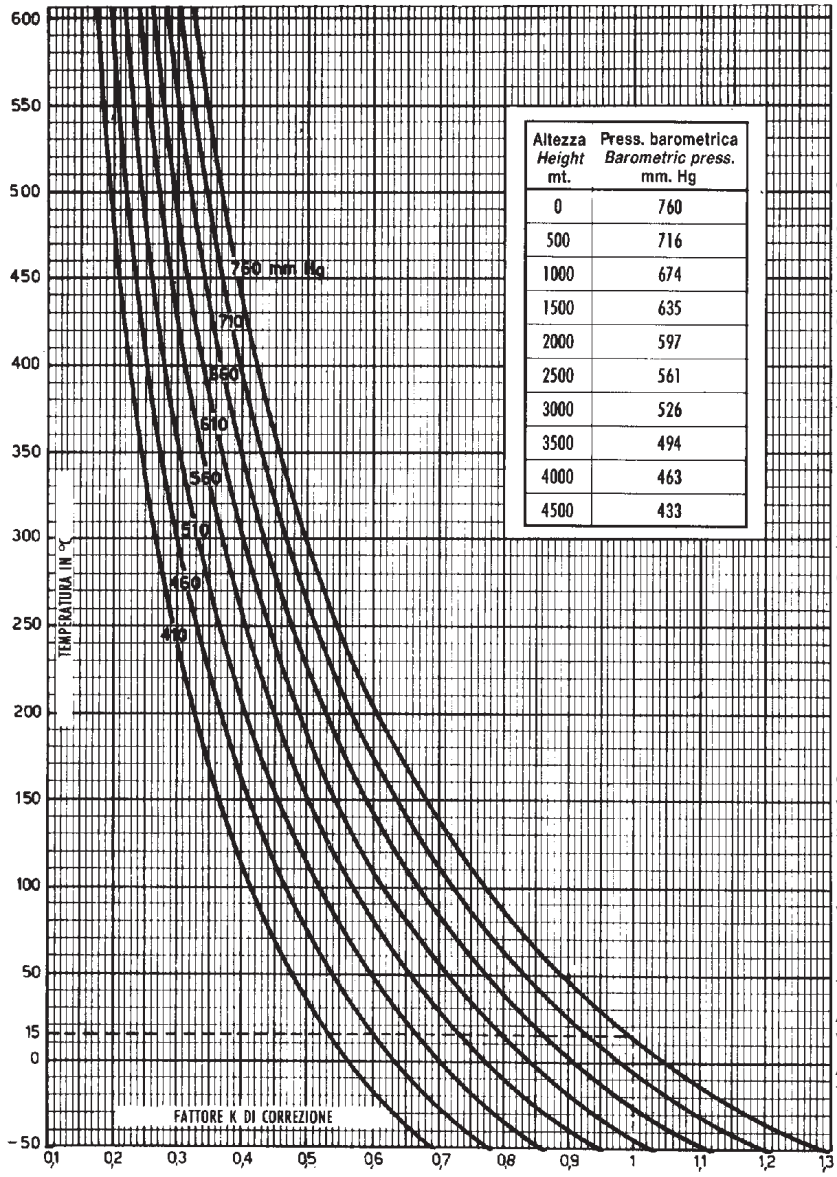

Altezza *Height* mt.	Press. barometrica *Barometric press.* mm. Hg
0	760
500	716
1000	674
1500	635
2000	597
2500	561
3000	526
3500	494
4000	463
4500	433

PRIMER :

Kako izabrati PR- L ventilator sposoban da izduva vazduh pri temperaturi od 100 °C, sa protokom vazduha 9000 m3/h, sa totalnim pritiskom od 90 mm ,na nadmorskoj visini od 950 m.
Iz k faktor diagrama : F = 0.7.
Odnosi se na podatke date diagramom :
Snabdevanje vazduhom: Q = 9000 m3/h
(nepromenjena postojeći volumetrični protok)
Totalni pritisak : 90/0.7 = 128 mm
Gustina vazduha : 1.22 * 0.7 = 0.854 kg/m3
Izabrali smo : PR- L 56 :
Snabdevanje vazduhom : Q = 9000 m3/h
Totalni pritisak : Ht = 128 mm wg.
Brzina ventilatora : 1650 rpm
Ulazna snaga : Pv = 4 KW
Prilikom aktivnog rada PR- L 56 ventilator prati sledeće rezultate :
Snabdevanje vazduhom : Q = 9000 m3/h
Totalni pritisak : Ht = 128*0.7 = 90 mm
Gustina vazduha = 0.854 kg/m3
Brzina ventilatora :1650 rpm
Ulazna snaga : Pv = 4*0.7 = 2.8 KW

EXAMPLE:

How to select a PR-L fan able to exhaust air at 100° C, with 9000 m³/h delivery, 90 mm. w.g. total pressure, placed at 950 m. on sea level.
From k factor diagram: F = 0,7.
Referring given data to diagram conditions, we have:
Dedlivery: Q = 9000 m³/h (unchanged, being volumetric delivery).
Total pressure: 90/0,7 = 128 mm.
Air density: 1,22x0,7 = 0,854 kg/m³.
We select PR-L 56:
Air delivery Q = 9000 m³/h.
Total pressure Ht = 128 mm wg.
Fan speed: 1650 r.p.m.
Input power Pv = 4KW.
At real working conditions, the PR-L 56 fan will performas follows:
Air delivery Q = 9000 m³/h.
Total pressure Ht = 128x0,7 = 90 mm.
Air density = 0,854 kg/m³.
Fan speed: 1650 rpm.
Input power Pv = 4x0,7 = 2,8 KW

PS-L

Centrifugalni ventilatori sa unazad zakrivljenim lopaticama za transport prljavog vazduha

Backward curved blade centrifugal fans for dusty air

OSNOVNI PODACI:

Ventilatori PS- L serije su našli svoju primenu u industrijskim pogonima za ventilaciju,grejanje i čišćenje-filtraciju vazduha, takođe mogu biti deo same proizvodnje u (drvnoj i hemijskoj industriji, mlinama, rudnicima itd).
Koristi se za transport veoma prljavog vazduha i ne abrazivnog dima sa maksimalnom temperaturom do 90°C u standardnoj izvedbi i do 300 °C u specijalnoj.
Serije predviđaju verziju sa direktnim prenosom (izvedba 4.) i verziju sa remenim prenosom (izvedba 1. , 9. i 12.)

KONSTRUKCIJA :

- Kućište je izrađeno od čelika , zaštićeno od spoljašnjih utica Epoxy smolom.
- Aerodinamično oblikovana spoljna kupa je izrađena od čelika, zaštićena od spoljnih uticaja Epoxy smolom.
- Radno kolo sa unazad zakrivljenim lopaticama, jednim otvorom je izrađeno od čelika i premazano Epoxy smolom.
- Mono blok sa kugličnim ležajima- izvedba 1-9-12, izrađen od livenog gvožđa,tako dizajniran radi boljeg samo podmazivanja.
- Trofazni asinhroni motor u skladu sa IEC34- IEC72- 89/392 EEC- 89/336 EEC- 73/23 EEC standardima,CE kvalifikovan, IP 55 zaštitom klase E.

Pogodni su za S1 režim (neprekidan rad pri stalnom opterećenju).

DODATNI DELOVI :

- Odvodni kanal kondenzata
- Kontrolna vrata
- Suprotan bok ulaznog otvora
- Suprotan bok izlaznog otvora
- Zaštita ulaznog otvora
- Ulazne fleksibilne veze
- Izlazne fleksibilne veze
- Kontrola lopatice ulaznog otvora
- Spoljašnji prigušivač
- Antivibracioni okvir
- Remeni pogon za izvedbu 1- 9-12 ,uključujući remenicu, remen i postolje motora.
- Štitnik remena motora.
- Osnovni horizontalni okvir za izvedbu 12
- Okretna potpora motora za izvedbu 9.

NA ZAHTEV :

- Model za transport vrelog gasa do temperature maksimalno 300°C. (PS-I / AT es 4)
- Model otporan na koroziju izrađen sa kućištem ,udubljenim delom i lopaticama od čelika AISI304 (PS- L / INOX-A)
- Model otporan na varnice klase C u skladu sa tabelom NV105 ANIMA – COAER (PS-L / AS)
- Model otporan na eksploziju sa trofaznim ili monofaznim asinhronim motorom Eex-d IIB T3, u skladu sa internacionalnim standardima IEC34-IEC72 – IEC79 I 89/392 EEC – 89/336 EEC – 73/23 EEC , sa CESI sertifikatom,CE kvalifikovan, IP 55 zaštitom klase F (PS- L /ATEX)

GENERAL DESCRIPTION

Fans of PS-L series find their main application in industrial plants of conditioning, ventilation, heating and filtering; they can also be used as part of manufacturing process (wood industry, chemical industry, mills, mines, foundries, etc.). They can convey very dusty air and not abrasive smoke, with max. temperature of 90°C in the standard configuration and 300°C in special version. The series foresees direct drive version (execution 4) and belt drive version (execution 1,9 and 12).

CONSTRUCTION

- Volute in steel sheet , protected against atmospheric agents by epoxy paint.
- Aerodynamically shaped inlet cone in steel sheet, protected against atmospheric agents by epoxy paint.
- Single inlet backward curved wheel with high efficiency, manufactured in epoxy painted steel sheet.
- Mono-block support for bearings, for execution 1 - 9 - 12, in cast iron, designed for easy lubrication operations.
- Three-phase asynchronous motor according to IEC34-IEC72 - 89/392 EEC - 89/336 EEC - 73/23 EEC Standards, marked CE, IP55, class F. Suitable for S1 service (continuos working at constant load).

ACCESSORIES

- Condensation drain hole.
- Inspection door.
- Inlet counter-flange.
- Outlet counter-flange.
- Inlet protection guard.
- Inlet flexible connection.
- Outlet flexible connection.
- Inlet vane control.
- Outlet damper.
- Antivibration mounts.
- Belt drive kit for execution 1-9-12, with pulleys, belts and motor slides. Protection guard for belts.
- Horizontal baseframe for exec. 12.
- Swing motor support for exec. 9.

UPON REQUEST

- High temperature version suitable for conveying hot gases, max 300°C (PS-L/AT).
- Corrosion resistant version, manufactured with casing, inlet side disc and impeller in stainless steel AISI304 (PS-L/INOX-A).
- Spark proof version, class C, according to table NV105 ANIMA-COAER (PS-L/AS).
- Explosion proof version, with asynchronous three-phase or single-phase motor EEx -d IIB T3, according to international standards IEC34-IEC72 - IEC79 and 89/392 EEC-89/336EEC-73/23 EEC, with CESI certificate and marked CE, IP55, class F (PS-L/ATEX).

UGLOVI ISPUŠTANJA / DISCHARGE ANGLES

PS-L

Rotacija Rotation RD								
Forma-Form	0	45	90	135	180(*)	225(*)	270	315
Rotacija Rotation LG								
Visina-Height	E1				E2		E3	

Važno: Standardna orijentacija LG270°/Standard orientation LG270°
(*) Zahteva specijalnu konstrukciju / Request special construction

IZVEDBA / EXECUTIONS

PS-L

4: Radno kolo direktno spoljeno na motor , fiksirano od strane nosača motora.
4: Impeller directly coupled to the motor supported by the motor support base

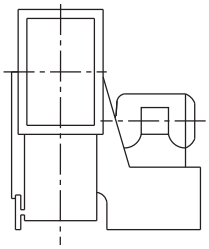

1: Aranžman za remeni pogon sa radnim kolom povezanim na osovinu, fiksiran od strane postolja motora.
1: Arrangement for belt drive with impeller directly coupled to the support shaft carried by the motor support base.

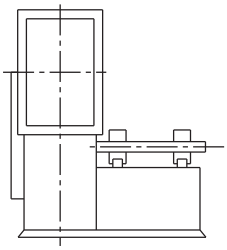

9: Isti slučaj kao kod primera 1. sa aranžmanom za motor montiranog sa strane i na postolje ventilatora.
9: same as execution 1 with arrangement for the motor assembled on the side of the support base.

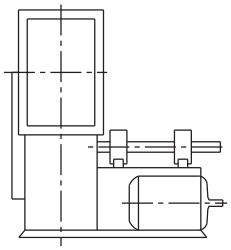

12: Isti slučaj kao kod primera 1. sa aranžmanom za radno kolo i motor montirane na donji deo postolja ventilatora.
12: same as execution 1 with arrangement for fan and motor mounted on common basement

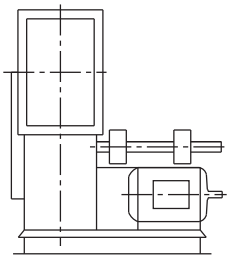

SEK. 6

POZICIJA MOTORA / MOTOR POSITION

PS-L

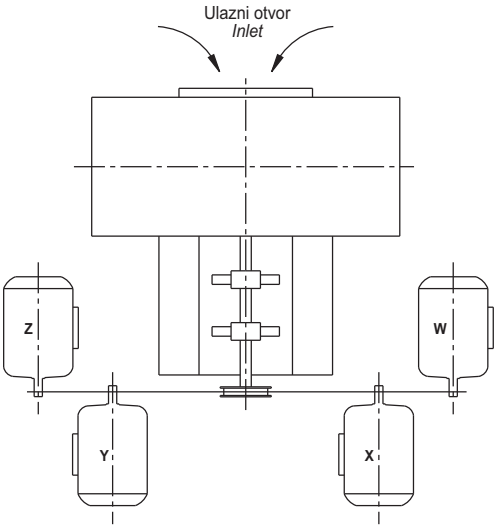

Frekvencija 50 Hz - Temperatura vazduha 15°C – Barometarski pritisak760 mm Hg – Specifična težina vazduha1,22 Kg/m3
Frequency 50Hz – Air temperature 15°C – Barometric pressure 760 mm Hg – Air specific weight 1,22 Kg/m3

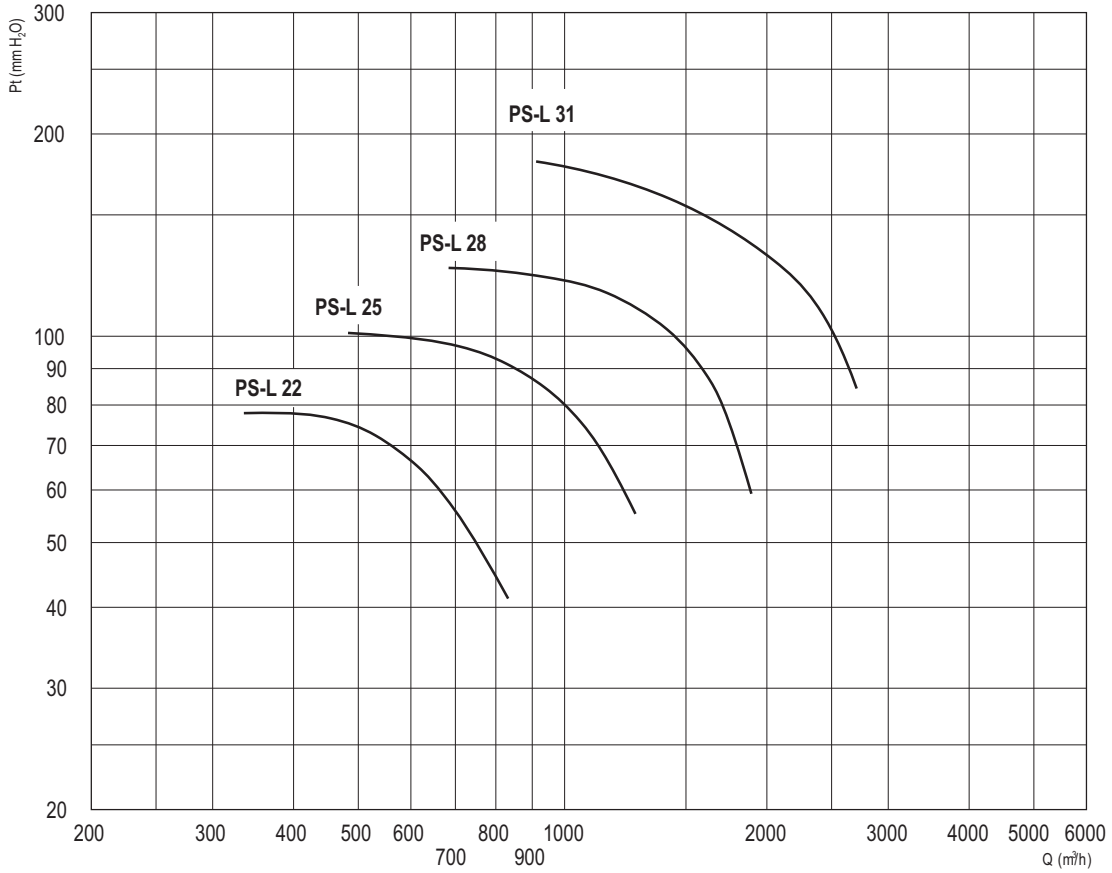

PS-L 22 (aranžman 4/ arrangement 4)

Tip Type	Model Model	U	P	Pm (kW)	In max (A)	IP/CL	Lp dB(A)
PS-L	222	T	2	0,18	0,5	55/F	64

OPERATIVNI LIMIT / OPERATIONAL LIMITS

Tip Type	Model Model	Q max (m^3/h)	C max (m/s)	S (m^2)	Pd^2 (Kgm^2)	Mot. (Gr)
PS-L	222	830	19,2	0,012	0,08	63

$Pd = 0,06218 \times (Q/45,3)^2 = mm\ H_2O$

PS-L 25 (aranžman 4/ arrangement 4)

Tip Type	Model Model	U	P	Pm (kW)	In max (A)	IP/CL	Lp dB(A)
PS-L	252	T	2	0,37	1,2	55/F	67

OPERATIVNI LIMIT / OPERATIONAL LIMITS

Tip Type	Model Model	Q max (m^3/h)	C max (m/s)	S (m^2)	Pd^2 (Kgm^2)	Mot. (Gr)
PS-L	252	1.330	12,3	0,03	0,10	71

$Pd = 0,06218 \times (Q/72,5)^2 = mm\ H_2O$

PS-L 28 (aranžman 4/ arrangement 4)

Tip Type	Model Model	U	P	Pm (kW)	In max (A)	IP/CL	Lp dB(A)
PS-L	282	T	2	0,75	1,9	55/F	70

OPERATIVNI LIMIT / OPERATIONAL LIMITS

Tip Type	Model Model	Q max (m^3/h)	C max (m/s)	S (m^2)	Pd^2 (Kgm^2)	Mot. (Gr)
PS-L	282	1.900	13,9	0,038	0,16	80

$Pd = 0,06218 \times (Q/90)^2 = mm\ H_2O$

PS-L 31 (aranžman 4/ arrangement 4)

Tio Type	Model Model	U	P	Pm (kW)	In max (A)	IP/CL	Lp dB(A)
PS-L	312	T	2	1,5	3,5	55/F	73

OPERATIVNI LIMIT / OPERATIONAL LIMITS

Tip Type	Model Model	Q max (m^3/h)	C max (m/s)	S (m^2)	Pd^2 (Kgm^2)	Mot. (Gr)
PS-L	312	2.700	18,8	0,04	0,21	90

$Pd = 0,06218 \times (Q/112,9)^2 = mm\ H_2O$

Frekvencija 50 Hz - Temperatura vazduha 15°C – Barometarski pritisak760 mm Hg – Specifična težina vazduha1,22 Kg/m3
Frequency 50Hz – Air temperature 15°C – Barometric pressure 760 mm Hg – Air specific weight 1,22 Kg/m3

PS-L 35 (aranžman 4/arrangement 4)

Tip Type	Model Model	U	P	Pm (kW)	In max (A)	IP/CL	Lp dB(A)
PS-L	352	T	2	2,2	5,1	55/F	78

OPERATIVNI LIMIT / OPERATIONAL LIMITS

Tip Type	Model Model	Q max (m^3/h)	C max (m/s)	S (m^2)	Pd^2 (Kgm^2)	Mot. (Gr)
PS-L	352	3850	17,8	0,06	0,5	90

Maksimalni obrtaj u odnosu na temperaturu vazduha
Maximum rpm with regard to air temperature

Temperatura vazduha Air temperature	rpm	Konstrukcija Construction
0°C - 100° C	4000	Standard
100°C - 200°C	3550	vis.temperatura/High temperature (PS-L-AT)
200°C - 300° C	3150	vis.temperatura/High temperature (PS-L-AT)

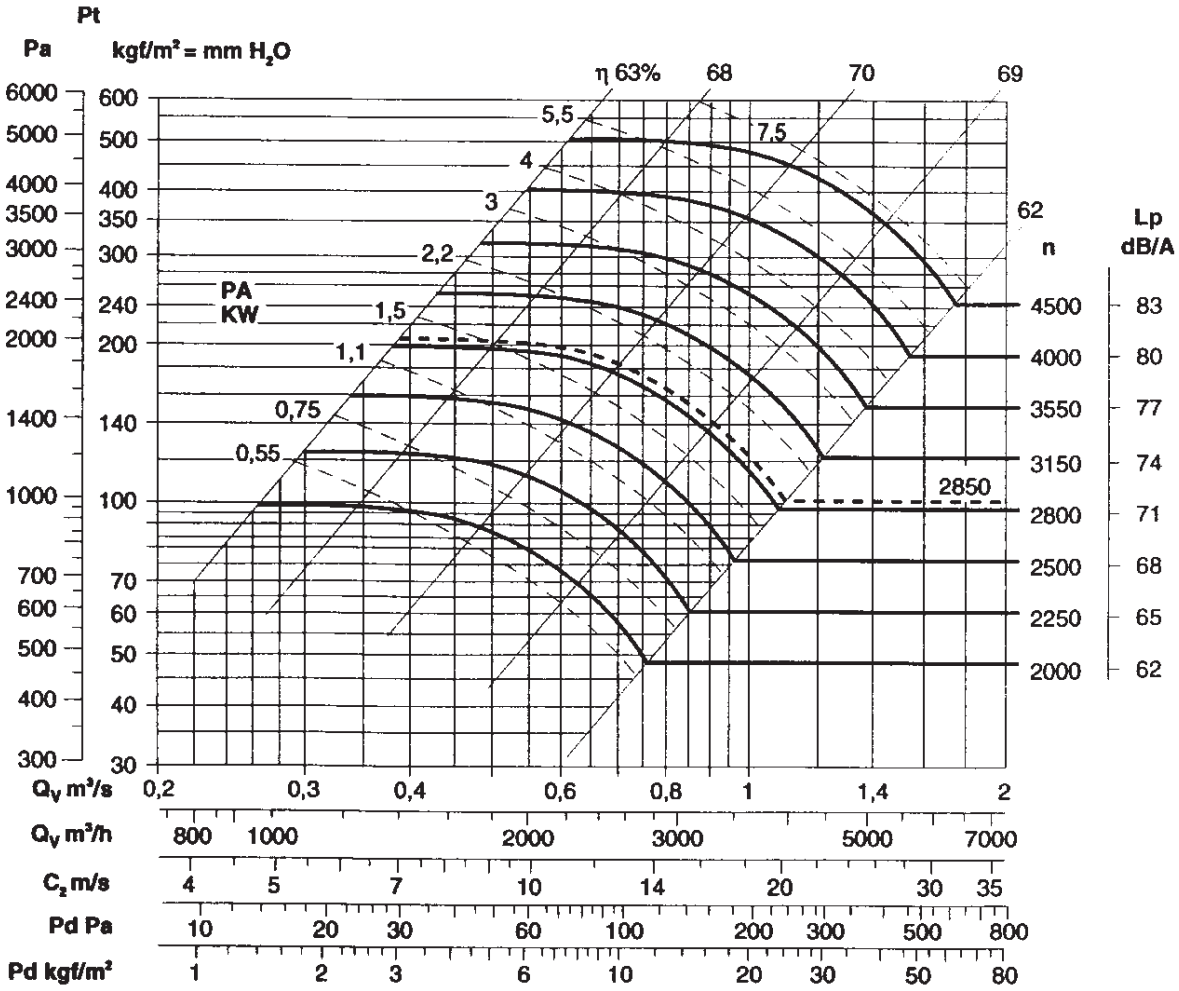

Frekvencija 50 Hz - Temperatura vazduha 15°C – Barometarski pritisak760 mm Hg – Specifična težina vazduha1,22 Kg/m3
Frequency 50Hz – Air temperature 15°C – Barometric pressure 760 mm Hg – Air specific weight 1,22 Kg/m3

PS-L 40 (aranžman 4/arrangement 4)

Tip Type	Model Model	U	P	Pm (kW)	In max (A)	IP/CL	Lp dB(A)
PS-L	402	T	2	4	8,5	55/F	81

OPERATIVNI LIMIT / OPERATIONAL LIMITS

Tip Type	Model Model	Q max (m^3/h)	C max (m/s)	S (m^2)	Pd^2 (Kgm^2)	Mot. (Gr)
PS-L	402	6150	24,4	0,07	0,8	112

Maksimalni obrtaj u odnosu na temperaturu vazduha
Maximum rpm with regard to air temperature

Temperatura vazduha Air temperature	rpm	Konstrukcija Construction
0°C - 100° C	3550	Standard
100°C - 200°C	3150	vis. temperatura/High temperature (PS-L-AT)
200°C - 300° C	2800	vis. temperatura/High temperature (PS-L-AT)

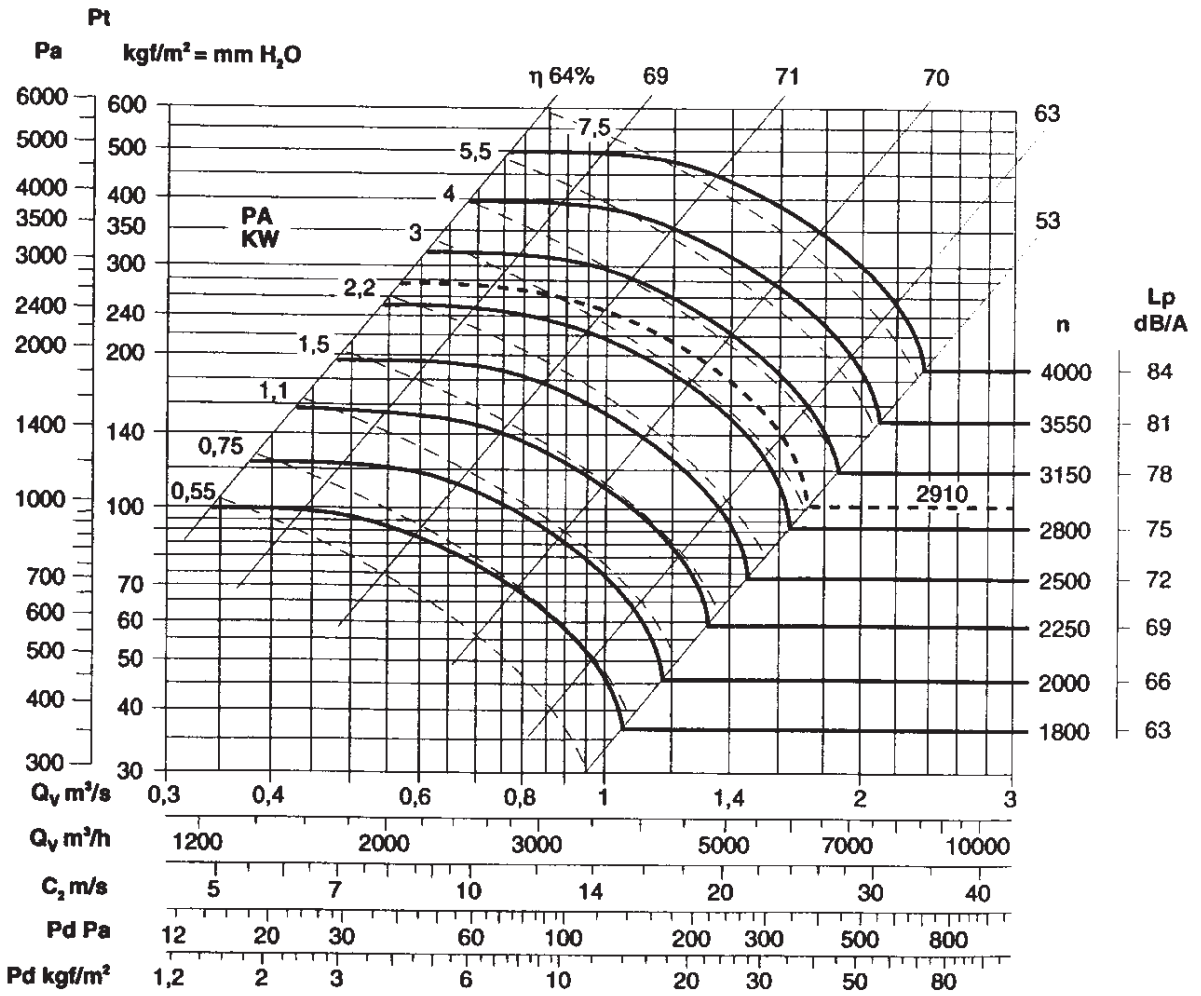

SEK. 6

Frekvencija 50 Hz - Temperatura vazduha 15°C – Barometarski pritisak760 mm Hg – Specifična težina vazduha1,22 Kg/m3
Frequency 50Hz – Air temperature 15°C – Barometric pressure 760 mm Hg – Air specific weight 1,22 Kg/m3

PS-L 45 (aranžman 4/ arrangement 4)

Tip Type	Model Model	U	P	Pm (kW)	In max (A)	IP/CL	Lp dB(A)
PS-L	452	T	2	7,5	15,3	55/F	85

OPERATIVNI LIMIT / OPERATIONAL LIMITS

Tip Type	Model Model	Q max (m^3/h)	C max (m/s)	S (m^2)	Pd^2 (Kgm^2)	Mot. (Gr)
PS-L	452	8500	26,2	0,09	1,4	132

Maksimalni obrtaj u odnosu na temperaturu vazduha
Maximum rpm with regard to air temperature

Temperatura vazduha Air temperature	rpm	Konstrukcija Construction
0°C - 100° C	3150	Standard
100°C - 200°C	2800	vis.temperatura/High temperature (PS-L-AT)
200°C - 300° C	2500	vis.temperatura/High temperature (PS-L-AT)

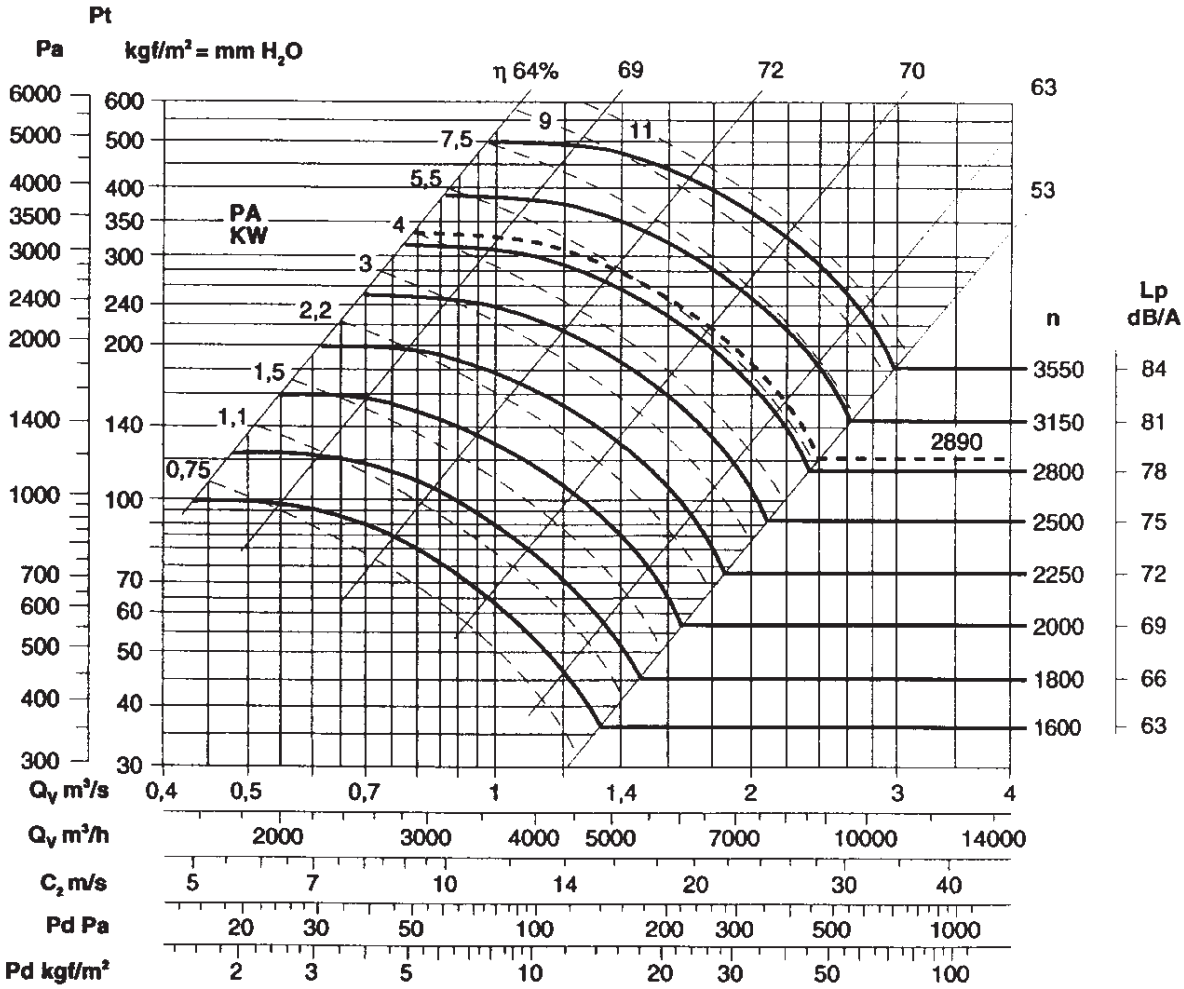

SEK. 6

Frekvencija 50 Hz - Temperatura vazduha 15°C – Barometarski pritisak760 mm Hg – Specifična težina vazduha1,22 Kg/m3
Frequency 50Hz – Air temperature 15°C – Barometric pressure 760 mm Hg – Air specific weight 1,22 Kg/m3

PS-L 50 (aranžman 4/ arrangement 4)

Tip Type	Model Model	U	P	Pm (kW)	In max (A)	IP/CL	Lp dB(A)
PS-L	502	T	2	15	29	55/F	89
PS-L	504	T	4	1,5	3,7	55/F	69

OPERATIVNI LIMIT / OPERATIONAL LIMITS

Tip Type	Model Model	Q max (m^3/h)	C max (m/s)	S (m^2)	Pd^2 (Kgm^2)	Mot. (Gr)
PS-L	502	12000	30,2	0,11	2,6	160
PS-L	504	5400	13,6	0,11	2,6	90

Maksimalni obrtaj u odnosu na temperaturu vazduha
Maximum rpm with regard to air temperature

Temperatura vazduha Air temperature	rpm	Konstrukcija Construction
0°C - 100° C	2800	Standard
100°C - 200°C	2500	vis.temperatura/High temperature (PS-L-AT)
200°C - 300° C	2250	vis.temperatura/High temperature (PS-L-AT)

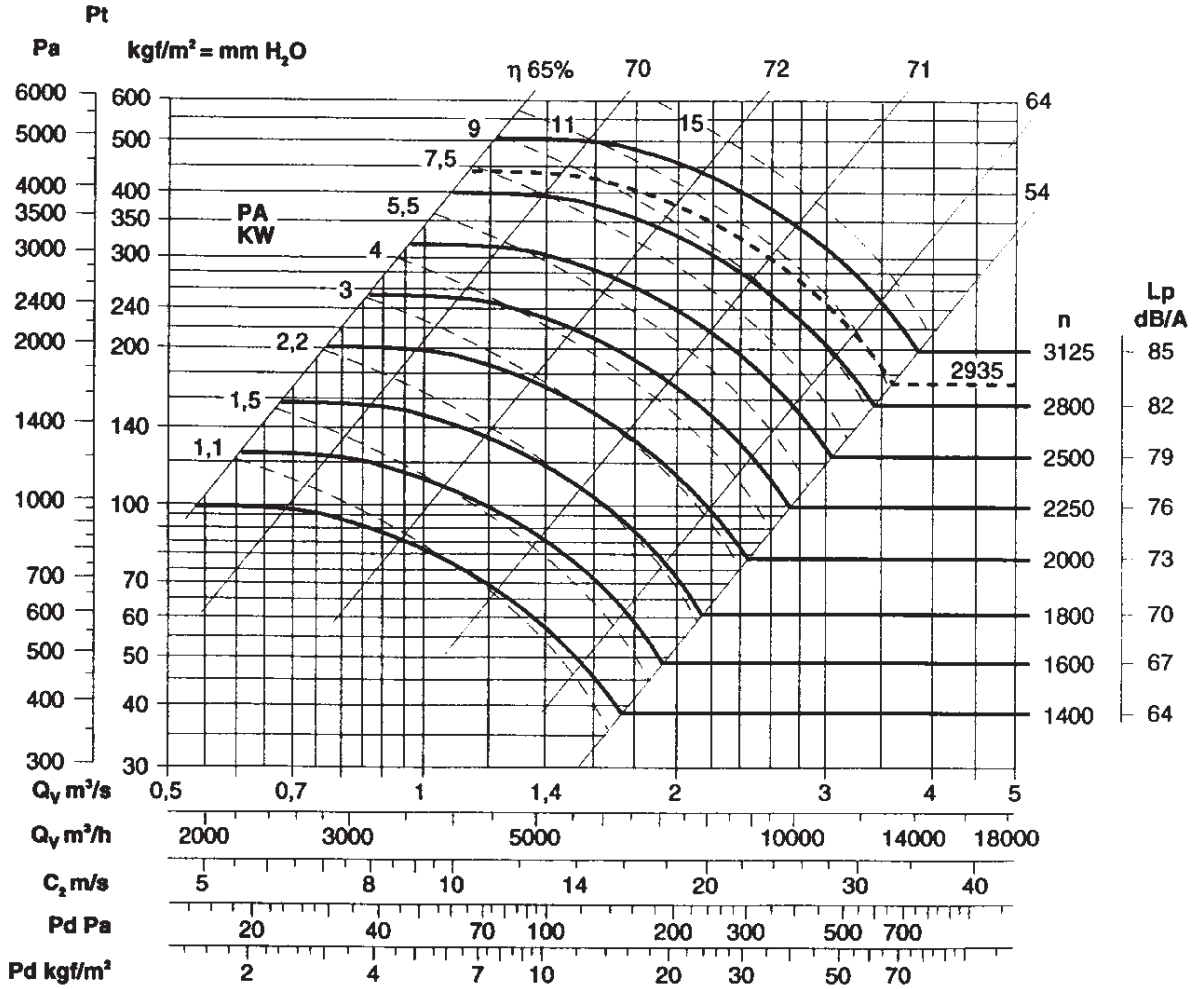

SEK.6

Frekvencija 50 Hz - Temperatura vazduha 15°C – Barometarski pritisak760 mm Hg – Specifična težina vazduha1,22 Kg/m3
Frequency 50Hz – Air temperature 15°C – Barometric pressure 760 mm Hg – Air specific weight 1,22 Kg/m3

PS-L 56 (aranžman 4/arrangement 4)

Tip	Model	Alim.	Poli	Pm (kW)	In max (A)	IP/CL	Lp dB(A)
PS-L	562	T	2	22	42	55/F	92
PS-L	564	T	4	3	6,7	55/F	72

OPERATIVNI LIMIT / OPERATIONAL LIMITS

Tip	Model	Q max (m^3/h)	C max (m/s)	S (m^2)	Pd^2 (Kgm^2)	Mot. (Gr)
PS-L	562	17000	33,7	0,14	3,8	180
PS-L	564	7650	15,2	0,14	3,8	100

Maksimalni obrtaj u odnosu na temperaturu vazduha
Maximum rpm with regard to air temperature

Temperatura vazduha Air temperature	rpm	Konstrukcija Construction
0°C - 100° C	2500	Standard
100°C - 200°C	2250	vis. temperatura/High temperature (PS-L-AT)
200°C - 300° C	2000	vis. temperatura/High temperature (PS-L-AT)

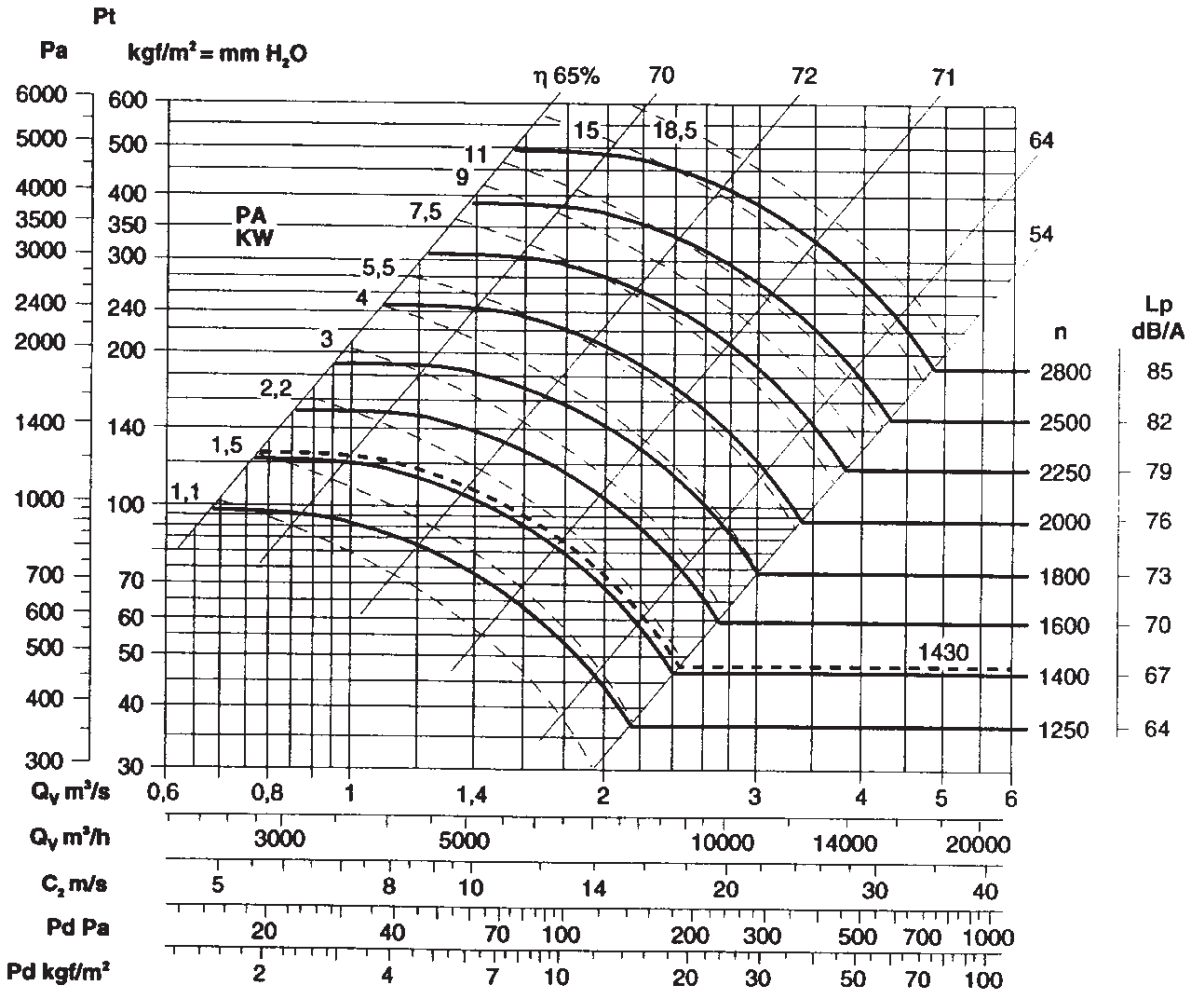

Frekvencija 50 Hz - Temperatura vazduha 15°C – Barometarski pritisak760 mm Hg – Specifična težina vazduha1,22 Kg/m3
Frequency 50Hz – Air temperature 15°C – Barometric pressure 760 mm Hg – Air specific weight 1,22 Kg/m3

PS-L 63 (aranžman 4/arrangement 4)

Tip Type	Model Model	U	P	Pm (kW)	In max (A)	IP/CL	Lp dB(A)
PS-L	634	T	4	5,5	12	55/F	78

OPERATIVNI LIMIT / OPERATIONAL LIMITS

Tip Type	Model Model	Q max (m^3/h)	C max (m/s)	S (m^2)	Pd^2 (Kgm^2)	Mot. (Gr)
PS-L	634	12000	18,5	0,18	6,3	132

Maksimalni obrtaj u odnosu na temperaturu vazduha
Maximum rpm with regard to air temperature

Temperatura vazduha Air temperature	rpm	Konstrukcija Construction
0°C - 100° C	2250	Standard
100°C - 200°C	2000	vis. temperatura/High temperature (PS-L-AT)
200°C - 300° C	1800	vis. temperatura/High temperature (PS-L-AT)

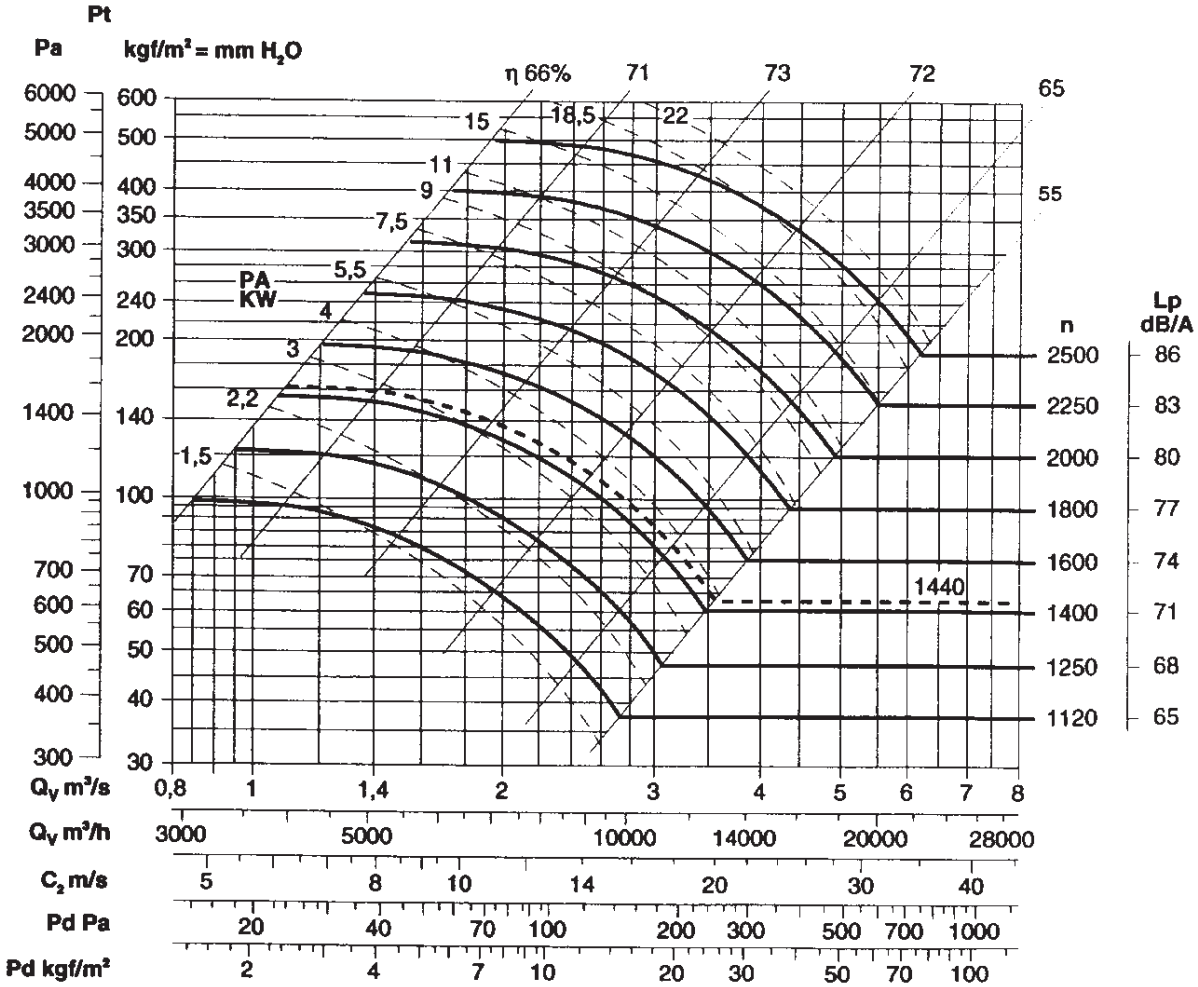

SEK.6

Frekvencija 50 Hz - Temperatura vazduha 15°C – Barometarski pritisak760 mm Hg – Specifična težina vazduha1,22 Kg/m3
Frequency 50Hz – Air temperature 15°C – Barometric pressure 760 mm Hg – Air specific weight 1,22 Kg/m3

PS-L 71 (aranžman 4/arrangement 4)

Tip Type	Model Model	U	P	Pm (kW)	In max (A)	IP/CL	Lp dB(A)
PS-L	714	T	4	11	22,4	55/F	81

OPERATIVNI LIMIT / OPERATIONAL LIMITS

Tip Type	Model Model	Q max (m^3/h)	C max (m/s)	S (m^2)	Pd^2 (Kgm^2)	Mot. (Gr)
PS-L	714	17000	21,4	0,22	12	160

Maksimalni obrtaj u odnosu na temperaturu vazduha
Maximum rpm with regard to air temperature

Temperatura vazduha Air temperature	rpm	Konstrukcija Construction
0°C - 100° C	2000	Standard
100°C - 200°C	1800	vis. temperatura/High temperature (PS-L-AT)
200°C - 300° C	1600	vis. temperatura/High temperature (PS-L-AT)

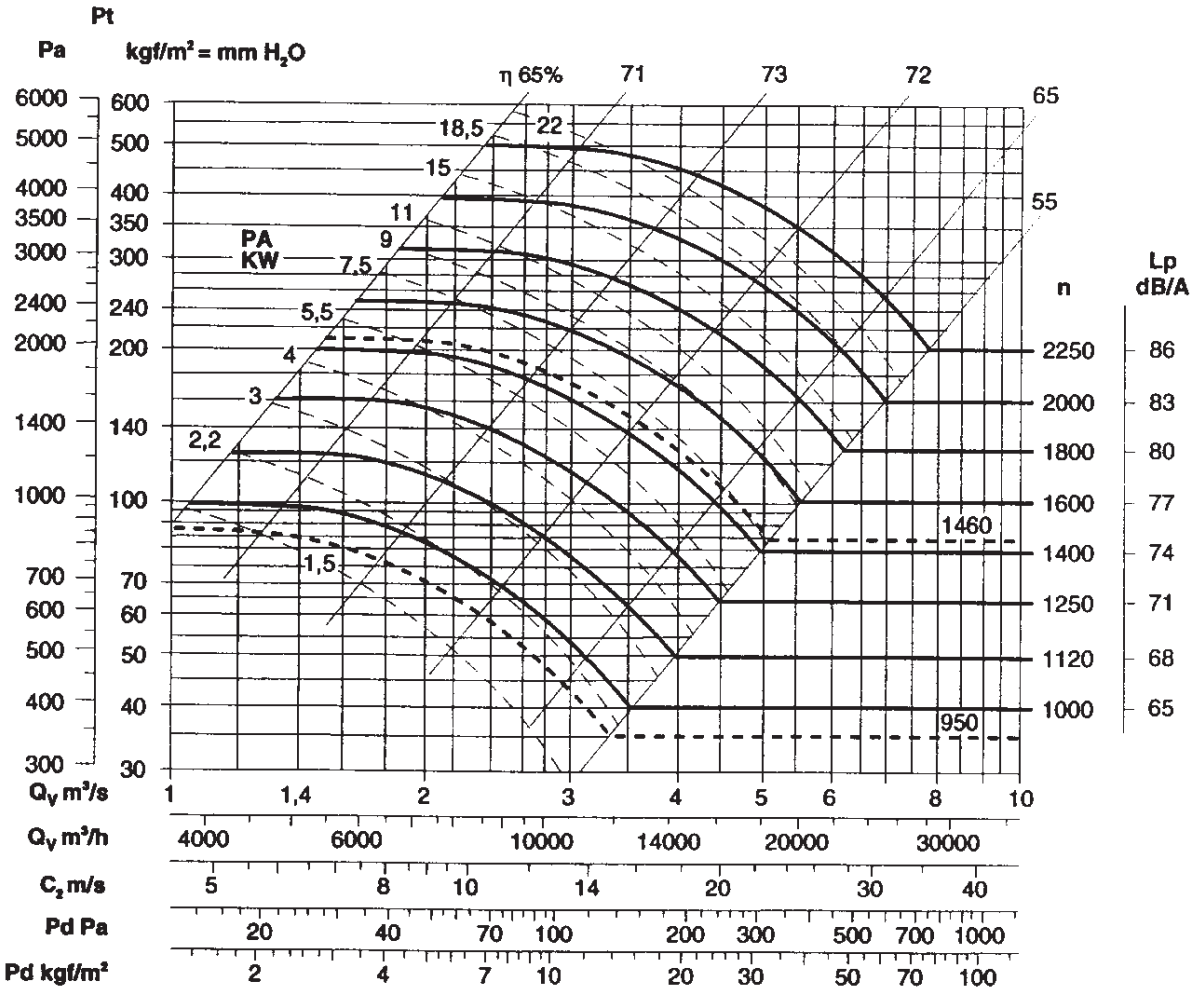

SEK. 6

Frekvencija 50 Hz - Temperatura vazduha 15°C – Barometarski pritisak760 mm Hg – Specifična težina vazduha1,22 Kg/m3
Frequency 50Hz – Air temperature 15°C – Barometric pressure 760 mm Hg – Air specific weight 1,22 Kg/m3

PS-L 80 (aranžman 4/ arrangement 4)

Tip Type	Model Model	U	P	Pm (kW)	In max (A)	IP/CL	Lp dB(A)
PS-L	804	T	4	18,5	40	55/F	84
PS-L	806	T	6	5,5	13,5	55/F	74

OPERATIVNI LIMIT / OPERATIONAL LIMITS

Tip Type	Model Model	Q max (m^3/h)	C max (m/s)	S (m^2)	Pd^2 (Kgm^2)	Mot. (Gr)
PS-L	804	24.200	23,2	0,29	18	180
PS-L	806	15.300	14,6	0,29	18	132

Maksimalni obrtaj u odnosu na temperaturu vazduha
Maximum rpm with regard to air temperature

Temperatura vazduha Air temperature	rpm	Konstrukcija Construction
0°C - 100° C	1800	Standard
100°C - 200°C	1600	vis. temperatura/High temperature (PS-L-AT)
200°C - 300° C	1400	vis. temperatura/High temperature (PS-L-AT)

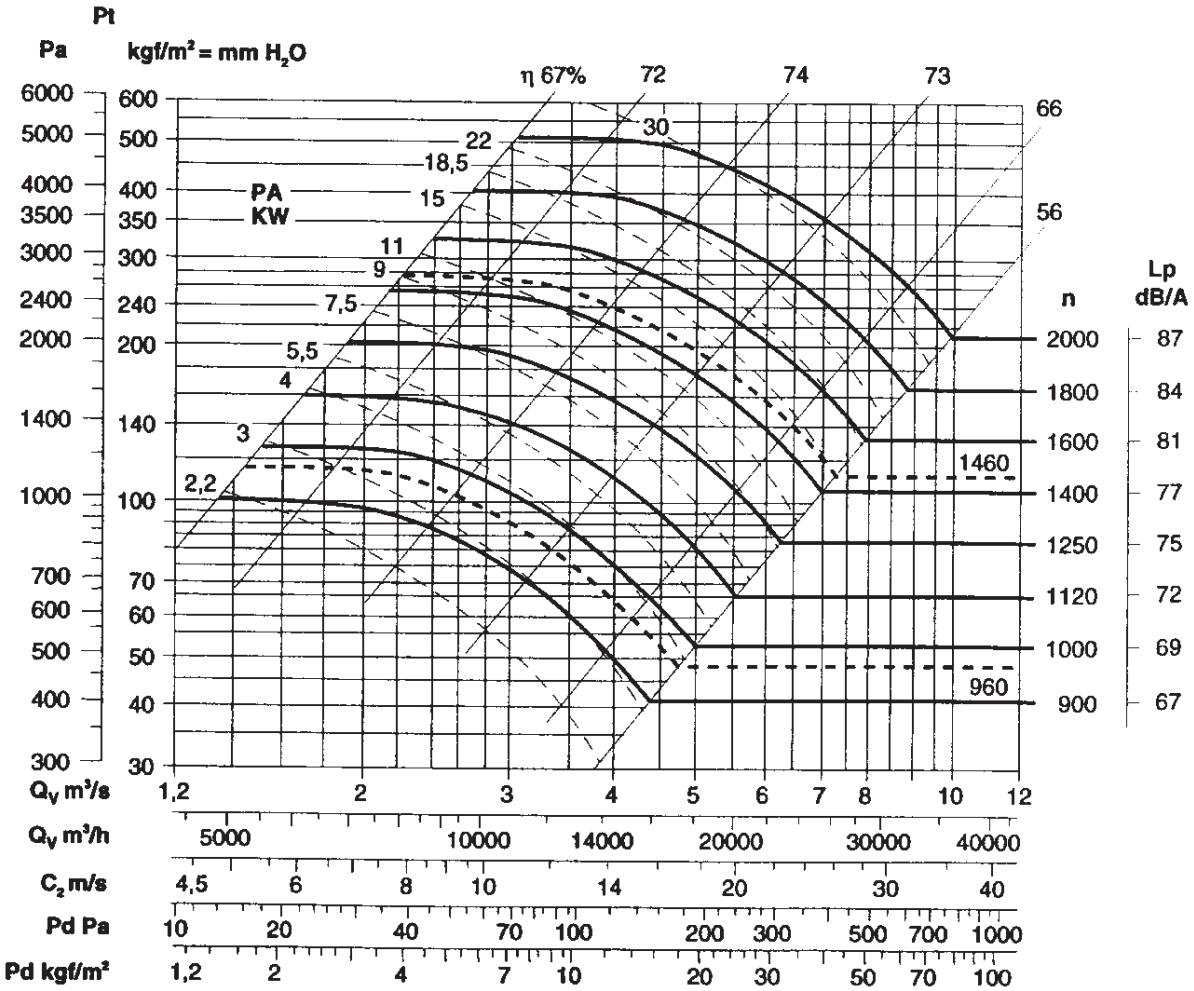

Frekvencija 50 Hz - Temperatura vazduha 15°C – Barometarski pritisak760 mm Hg – Specifična težina vazduha1,22 Kg/m3
Frequency 50Hz – Air temperature 15°C – Barometric pressure 760 mm Hg – Air specific weight 1,22 Kg/m3

PS-L 90 (aranžman 4/ arrangement 4)

Tip Type	Model Model	U	P	Pm (kW)	In max (A)	IP/CL	Lp dB(A)
PS-L	904	T	4	37	69,1	55/F	87
PS-L	906	T	6	11	22,5	55/F	77

OPERATIVNI LIMIT / OPERATIONAL LIMITS

Tip Type	Model Model	Q max (m^3/h)	C max (m/s)	S (m^2)	Pd^2 (Kgm^2)	Mot. (Gr)
PS-L	904	34.200	26,4	0,36	34	225
PS-L	906	21.600	16,7	0,36	34	160

Maksimalni obrtaj u odnosu na temperaturu vazduha
Maximum rpm with regard to air temperature

Temperatura vazduha Air temperature	rpm	Konstrukcija Construction
0°C - 100° C	1600	Standard
100°C - 200°C	1400	vis. temperatura/High temperature (PS-L-AT)
200°C - 300° C	1250	vis. temperatura/High temperature (PS-L-AT)

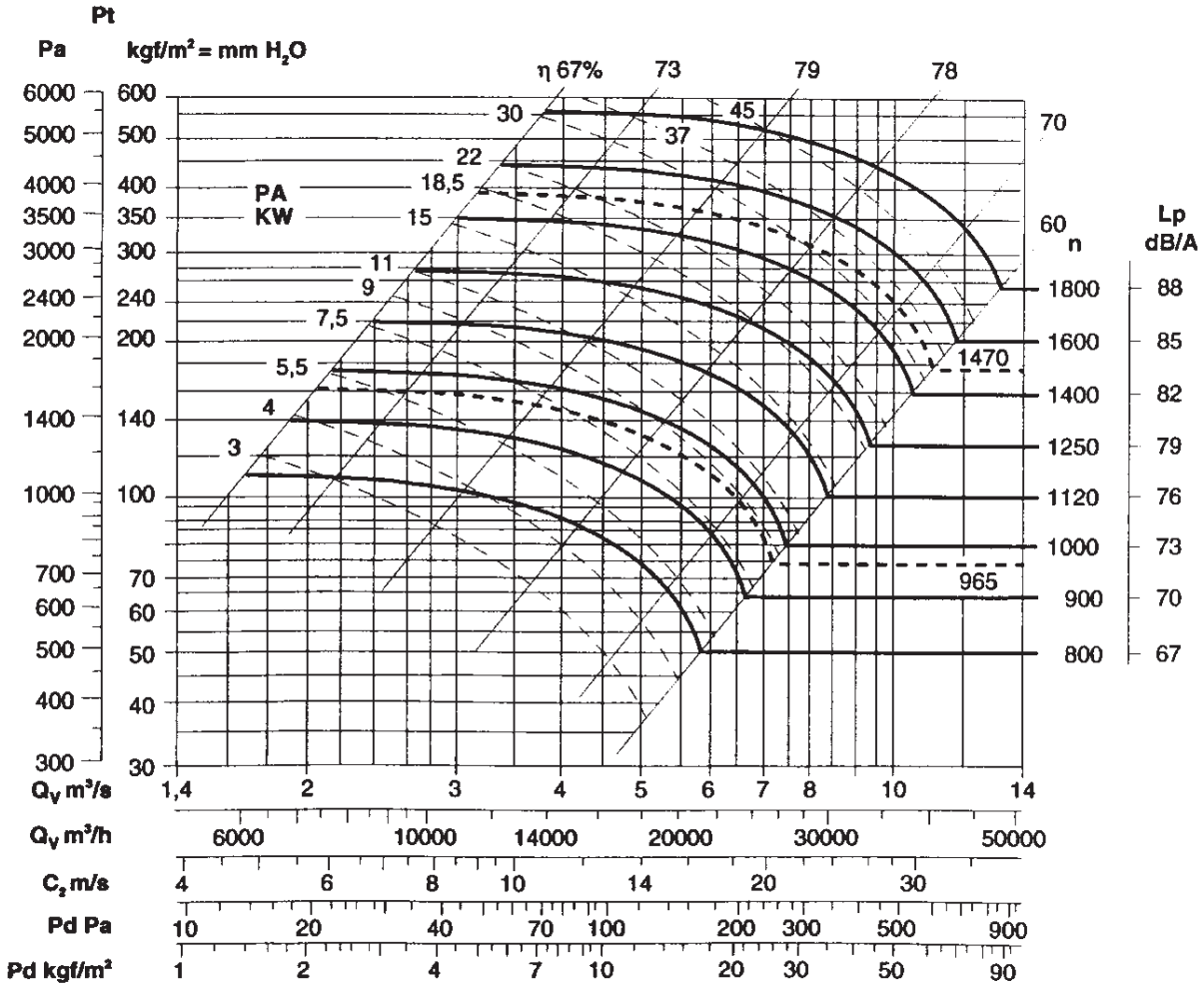

SEK. 6

ARANŽMAN 4 / ARRANGEMENT 4

Tip/Type	A	B	C	D	E* E1 0°+135°	E2 180°+225°	E3 270°+315°	F
PS-L 22	195	165	150	170	255	165	255	62
PS-L 25	246	195	175	211	315	195	315	86
PS-L 28	277	200	202	235	375	200	375	95
PS-L 31	302	225	229	258	400	225	400	105
PS-L 35	345	255	253	290	450	255	450	115
PS-L 40	370	285	286	315	500	285	500	127
PS-L 45	495	320	321	355	560	320	560	141
PS-L 50	472	360	355	400	600	360	600	157
PS-L 56	540	400	390	456	670	400	670	177
PS-L 63	602	450	439	510	750	450	750	195
PS-L 71	689	500	500	566	670	500	850	216
PS-L 80	780	560	560	641	755	560	950	241
PS-L 90	870	630	630	720	850	630	1060	275

Dimenzije u mm/Dimensions in mm

Važno : Pogledati tabelu na str. 26 sez. 6
See discharge angle schedule pag. 26 sez. 6

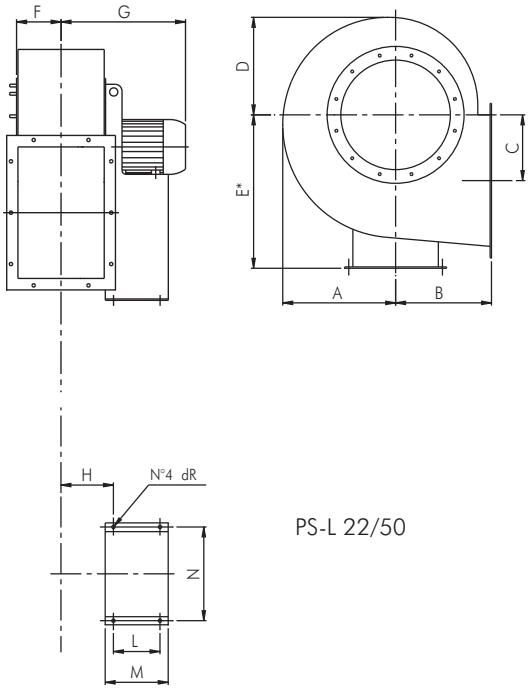

PS-L 22/50

SEK. 6

Tip/Type	Poli/Poles	G	H	I	L	M	N	P	dR	kg
PS-L 22	2	254	100	-	86	145	184	-	10	18
PS-L 25	2	290	121	-	121	180	203	-	10	26
PS-L 28	2	322	131	-	121	180	203	-	10	32
PS-L 31	2	352	151	-	133	205	234	-	10	44
PS-L 35	2	387	162	-	133	205	234	-	10	69
PS-L 40	2	475	148	-	197	250	289	-	12	110
PS-L 45	2	502	171	-	237	300	337	-	12	158
PS-L 50	2	646	198	-	337	415	395	-	17	247
"	4	431	203	195	133	205	234	-	12	135
PS-L 56	2	716	235	195	357	835	434	632	17	316
"	4	486	195	195	197	625	289	632	12	144
PS-L 63	4	582	225	215	237	714	337	702	12	191
PS-L 71	4	698	282	235	316	879	772	772	20	308
PS-L 80	4	743	286	260	361	993	862	862	20	430
"	6	633	286	260	201	833	862	862	20	340
PS-L 90	4	926	313	287	441	1127	962	962	20	620
"	6	736	313	287	316	1002	962	962	20	495

Dimenzije u mm/Dimensions in mm

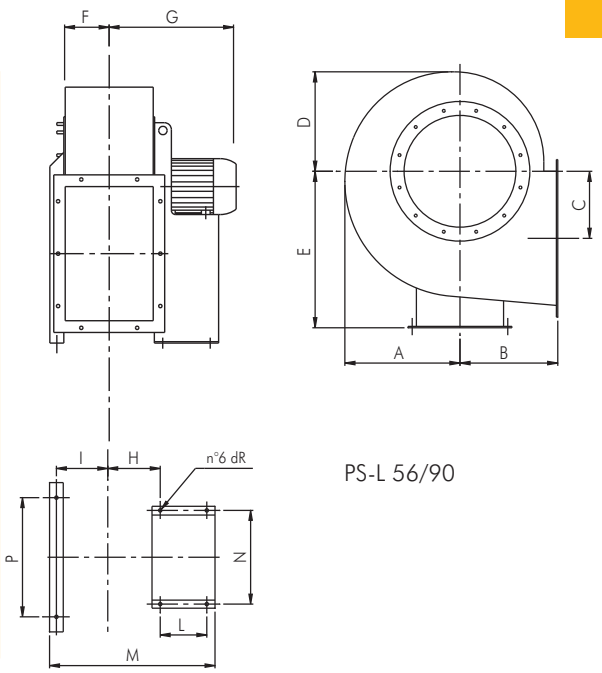

PS-L 56/90

Note: PS-L 22/63 dozvoljava modifikaciju ispusnog ugla
PS-L 71/90 nedozvoljava modifikaciju ispusnog ugla
Note: PS-L 22/63 allow the modification of discharge angle, PS-L 71/90 do not allow the modification of discharge angle

DIMENZIJE / DIMENSIONS

ULAZNI OTVOR / INLET

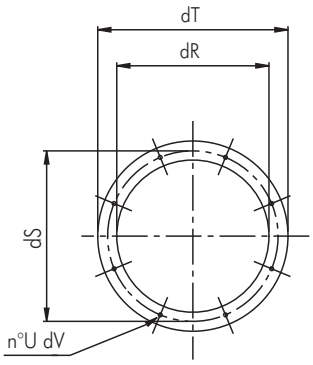

Tip/Type	dR	dS	dT	U	dV
22	130	150	170	4	8
25	185	219	255	8	8
28	205	241	275	8	8
31	228	265	298	8	8
35	255	292	325	8	10
40	285	332	365	8	10
45	320	366	400	8	10
50	360	405	440	8	10
56	405	448	485	12	10
63	455	497	535	12	10
71	505	551	585	12	10
80	565	629	665	12	10
90	635	698	735	12	12

Dimenzije u mm/Dimensions in mm

IZLAZNI OTVOR / OUTLET

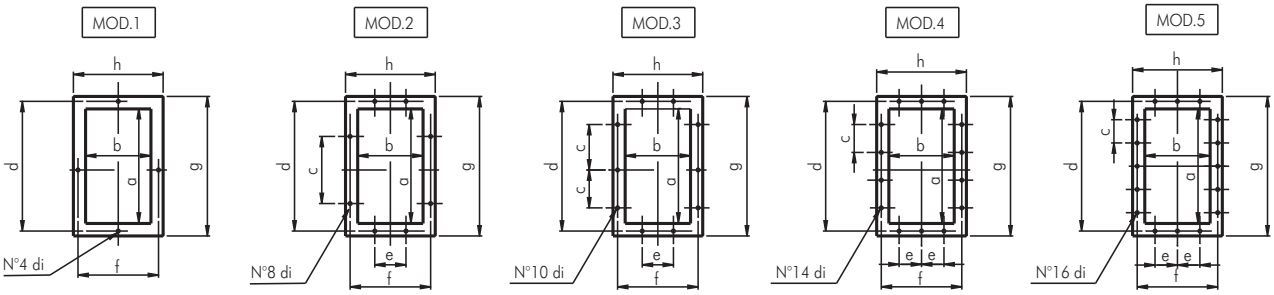

Tip/Type	a	b	c	d	e	f	g	h	di	MOD.
22	124	103	-	145	-	125	164	143	8	1
25	207	148	112	241	112	182	277	218	12	2
28	231	166	112	265	112	200	301	236	12	3
31	258	185	112	292	112	219	328	255	12	3
35	288	205	125	332	125	249	368	285	12	3
40	322	229	125	366	125	273	402	309	12	3
45	361	256	125	405	125	300	441	336	12	3
50	404	288	125	448	125	332	484	368	12	4
56	453	322	125	497	125	366	533	402	12	4
63	507	361	125	551	125	405	587	441	12	4
71	569	404	160	629	160	464	669	504	14	4
80	638	453	160	698	160	513	738	553	14	4
90	715	507	160	775	160	567	815	607	14	5

Dimenzije u mm/Dimensions in mm

ARANŽMAN 1 / ARRANGEMENT 1

Tip/Type	A	B	C	D	E* E1 0°+135°	E2 180°+225°	E3 270°+315°	F	G
PS-L 35	345	255	253	290	450	255	450	115	668
PS-L 40	370	285	286	315	500	285	500	127	693
PS-L 45	495	320	321	355	560	320	560	141	706
PS-L 50	472	360	355	400	600	360	600	157	828
PS-L 56	540	400	390	456	670	400	670	177	881
PS-L 63	602	450	439	510	750	450	750	195	907
PS-L 71	689	500	500	566	670	500	850	216	979
PS-L 80	780	560	560	641	755	560	950	241	1000
PS-L 90	870	630	630	720	850	630	1060	275	1026

Dimenzije u mm/Dimensions in mm

Važno : Pogledati tabelu na str. 26 sez. 6
See discharge angle schedule pag. 26 sez. 6

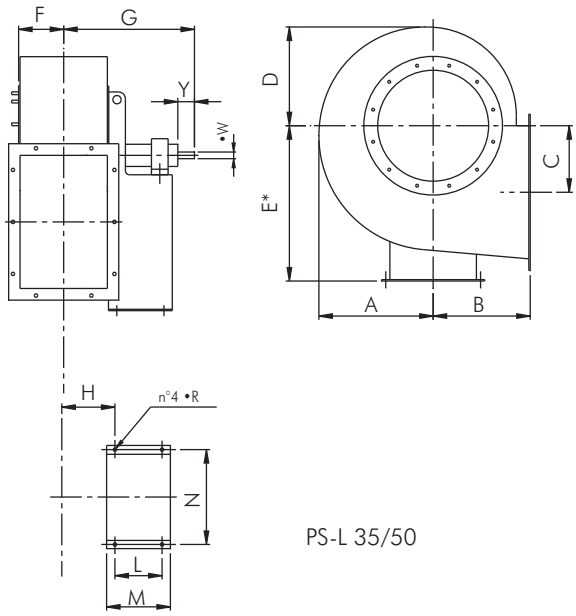

PS-L 35/50

SEK.6

Tip/Type	H	I	L	M	N	P	dR	Osovina/Shaft dW	Y	kg
PS-L 35	157	-	407	485	355	-	14	28	60	72
PS-L 40	168	-	407	485	355	-	14	38	80	85
PS-L 45	181	-	407	485	355	-	14	38	80	100
PS-L 50	198	-	477	560	364	-	17	42	110	142
PS-L 56	219	191	477	943	632	632	17	48	110	178
PS-L 63	239	211	477	983	702	702	17	48	110	230
PS-L 71	262	235	551	1114	772	772	19	48	110	280
PS-L 80	287	259	551	1183	862	862	19	55	110	352
PS-L 90	313	287	551	1237	962	962	19	55	110	435

Dimenzije u mm/Dimensions in mm

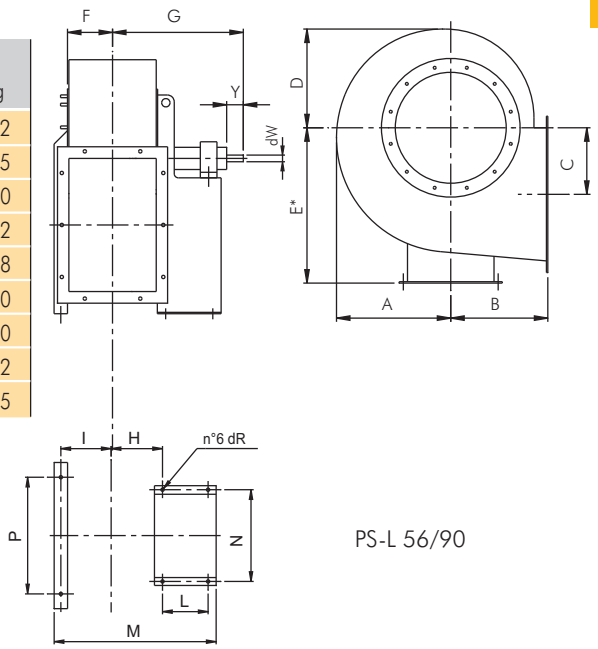

PS-L 56/90

Note: PS-L 22/63 dozvoljava modifikaciju ispusnog ugla
PS-L 71/90 nedozvoljava modifikaciju ispusnog ugla
Note: PS-L 22/63 allow the modification of discharge angle, PS-L 71/90 do not allow the modification of discharge angle

ULAZNI OTVOR / INLET

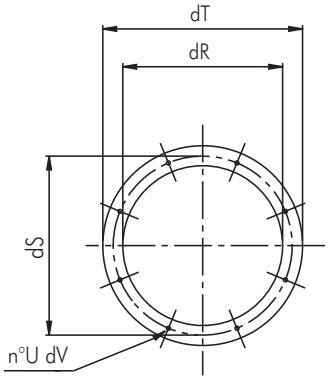

Tip/Type	dR	dS	dT	U	dV
35	255	292	325	8	10
40	285	332	365	8	10
45	320	366	400	8	10
50	360	405	440	8	10
56	405	448	485	12	10
63	455	497	535	12	10
71	505	551	585	12	10
80	565	629	665	12	10
90	635	698	735	12	12

Dimenzije u mm/Dimensions in mm

IZLAZNI OTVOR / OULET

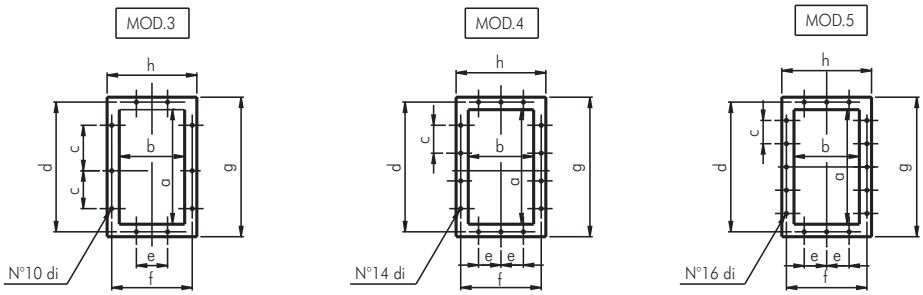

Tip/Type	a	b	c	d	e	f	g	h	di	MOD.
35	288	205	125	332	125	249	368	285	12	3
40	322	229	125	366	125	273	402	309	12	3
45	361	256	125	405	125	300	441	336	12	3
50	404	288	125	448	125	332	484	368	12	4
56	453	322	125	497	125	366	533	402	12	4
63	507	361	125	551	125	405	587	441	12	4
71	569	404	160	629	160	464	669	504	14	4
80	638	453	160	698	160	513	738	553	14	4
90	715	507	160	775	160	567	815	607	14	5

Dimenzije u mm/Dimensions in mm

LEGENDA/LEGEND

PS = Statički pritisak (mm/H2O)
PD = Dinamički pritisak (mm/H2O)
Pt = Totalni pritisak (mm/H2O)
Q = Transport vazduha (m3/H2O)
U = Nominalna voltaža (V)
M = Nominalna voltaža i frekvencija mono faze (230 V–50 Hz)
T = Nominalna voltaža i frekvencija tro faze (400 V – 50 Hz)
Rpm = Broj obrataja motora
Pm = Snaga morora (KW)
In = Nominalna apsorbna veličina (A)
IP = Mehanička zaštita motora
Cl = Kategorija izolacije motora
S = Spoljašnja površina (m2)
C = Brzina vazduha (m/s)
Pd2 = Inertni moment (Kgm2)
Lp = Nivo pritiska zvuka (dB)
Lw = Nivo jačine zvuka (dB)
Reg. = Regulator brzine
P = n° Polovi
2 pola = 3000 obrtaja
4 pola = 1500 obrtaja
6 pola = 1000 obrtaja
8 pola = 750 obrtaja

Pažnja ! Nivo pritiska zvuka se meri u slobodnom prostoru od 1.5 m razmaka od centra ventilatora , u bilo kom pravcu sa unutrašnjom i spoljašnjom stranom spoljenom na cevni sistem.

Značajno ! Buka samog ventilatora će biti veća , ukoliko se ne meri u slobodnom prostoru.

Ostvarljivi standardi : testiranje karakteristika je vršeno u skladu sa DIN24163 standardom, testiranje akustike je u skladu sa DIN45635T38 standardom.

Ps = Static pressure (mm/H_2O)
Pd = Dynamic pressure (mm/H_2O)
Pt = Total pressure (mm/H_2O)
Q = Air delivery (m^3/h)
U = Rated voltage (V)
M = Rated voltage and frequency single-phase (230V-50Hz)
T = Rated voltage and frequency three-phase (400V-50Hz)
rpm = Nominal motor speed
Pm = Installed motor power (kW)
In = Nominal absorbed current (A)
IP = Motor mechanical protection
Cl = Motor Insulation class
S = Outlet area (m^2)
C = Air velocity (m/s)
Pd2 = Impeller inertia moment (Kgm^2)
Lp = Sound pressure level (dB)
Lw = Sound power level (dB)
Reg. = Speed regulator
P = n° Poles
2 poles = 3000 nominal rpm
4 poles = 1500 nominal rpm
6 poles = 1000 nominal rpm
8 poles = 750 nominal rpm

Attention: the sound pressure level is measured in free field at 1,5 m distance from the fan centre, in any direction, with inlet and outlet sides connected to duct.

Note: when selecting it is necessary to keep in mind that the noise of the fan, if not measured in free field, will be higher than the shown values.

Standards achieved: Performance tests according to DIN24163 standard - Acoustic tests according to DIN45635T38 standard

FAKTORI PRETVARANJA / CONVERSION FACTORS

Snaga / Power

	W	kW	CV
W	1	0,001	0,00136
kW	1000	1	1,36
CV	735,5	0,7355	1

Pritisak / Pressure

	Pa	mm/H_2O	in.WG
Pa	1	0,101972	0,00401
mm/H_2O	9,807	1	0,0394
in.WG	249,09	25,4	1

Protok vazduha / Flow rate

	m^3/s	m^3/h	cfm
m^3/s	1	3600	2118,88
m^3/h	0,0002778	1	0,5886
cfm	0,0004719	1,6990	1

KAKO NARUČITI / HOW TO ORDER

ARANŽMAN 1/ARRANGEMENT 1

Esempio/Example: Tip / Type	Model / Model	Ispuštanje / Discharge	Ugao / Angle	rpm	Aranžman / Arrangement
PS-L	50	LG	270°	2000 rpm	Es.1

ARANŽMAN 4/ARRANGEMENT 4

Primer: Tip / Type	Model / Model	Voltaža / Voltage	Ispuštanje / Discharge	Ugao / Angle	Aranžman / Arrangement
PS-L	504	T	LG	270°	Es.4

ARANŽMAN 9 e 12/ARRANGEMENT 9 and 12

Primer : Tip / Type	Model / Model	Voltaža / Voltage	Ispuštanje / Discharge	Ugao / Angle	Pozicija motora / Motor position	rpm	Aranžman / Arrangement
PS-L	56	T	LG	270°	Z	2500 rpm	Es.9

Tel. (++39) 030 9913575 (5 linee r.a.) - fax (++39) 030 9913766 - E-mail dynair@dynair.it - www.dynair.it
Dynair S.r.l. - 25017 Lonato (Bs) - ITALY

Centrifugalni ventilatori sa suprotno nazubljenim lopaticama

Backward curved blade centrifugal fans

Popravljiv faktor "K" za definisanje gustine vazduha u stanju različitog od standarda (15°C, 760 mm. Hg)

"K" correcting factor to define air density in conditions differing from standard (15°C, 760 mm. Hg)

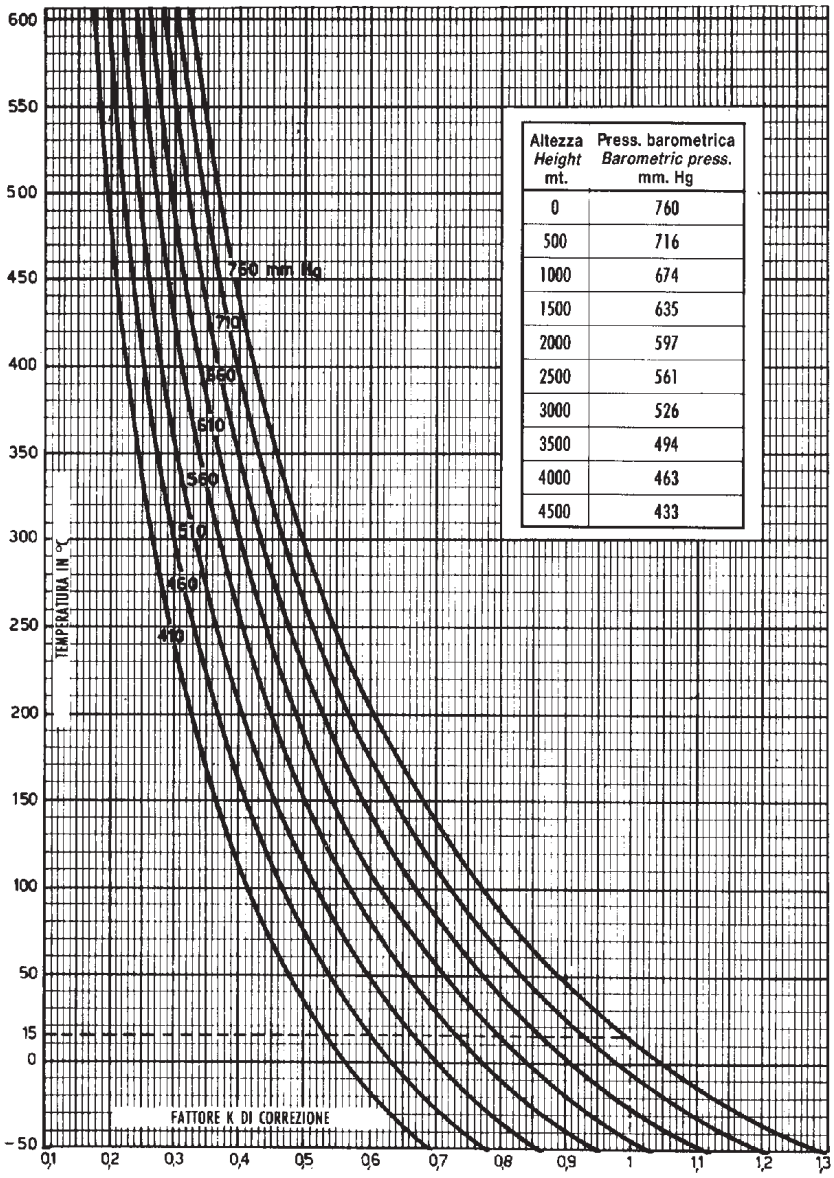

Altezza *Height* mt.	Press. barometrica *Barometric press.* mm. Hg
0	760
500	716
1000	674
1500	635
2000	597
2500	561
3000	526
3500	494
4000	463
4500	433

PRIMER :

Kako izabrati PR- L ventilator sposoban da izduva vazduh pri temperaturi od 100 °C, sa protokom vazduha 9000 m3/h, sa totalnim pritiskom od 90 mm ,na nadmorskoj visini od 950 m.
Iz k faktor diagrama : F = 0.7.
Odnosi se na podatke date diagramom :
Snabdevanje vazduhom: Q = 9000 m3/h
(nepromenjenia postojeći volumetrični protok)
Totalni pritisak : 90/0.7 = 128 mm
Gustina vazduha : 1.22 * 0.7 = 0.854 kg/m3
Izabrali smo : PR- L 56 :
Snabdevanje vazduhom : Q = 9000 m3/h
Totalni pritisak : Ht = 128 mm wg.
Brzina ventilatora : 1650 rpm
Ulazna snaga : Pv = 4 KW
Prilikom aktivnog rada PR- L 56 ventilator prati sledeće rezultate :
Snabdevanje vazduhom : Q = 9000 m3/h
Totalni pritisak : Ht = 128*0.7 = 90 mm
Gustina vazduha = 0.854 kg/m3
Brzina ventilatora :1650 rpm
Ulazna snaga : Pv = 4*0.7 = 2.8 KW

EXAMPLE:

How to select a PR-L fan able to exhaust air at 100° C, with 9000 m³/h delivery, 90 mm. w.g. total pressure, placed at 950 m. on sea level.
From k factor diagram: F = 0,7. Referring given data to diagram conditions, we have:
Dedlivery: Q = 9000 m³/h (unchanged, being volumetric delivery).
Total pressure: 90/0,7 = 128 mm.
Air density: 1,22x0,7 = 0,854 kg/m³.
We select PR-L 56:
Air delivery Q = 9000 m³/h.
Total pressure Ht = 128 mm wg.
Fan speed: 1650 r.p.m.
Input power Pv = 4KW.
At real working conditions, the PR-L 56 fan will performas follows:
Air delivery Q = 9000 m³/h.
Total pressure Ht = 128x0,7 = 90 mm.
Air density = 0,854 kg/m³.
Fan speed: 1650 rpm.
Input power Pv = 4x0,7 = 2,8 KW

PV-L

Centrifugalni ventilatori sa unazad zakrivljenim lopaticama za transport prljavog vazduha
Backward curved blade centrifugal fans for dusty air

OSNOVNI PODACI :

Ventilatori PV- L serije su našli svoju glavnu primenu u (industrijskim pogonima za izradu pneumatika ,cementa, keramike, stakla, drveta, mermera, rudnicima itd) za izduvavanje, transport i filtraciju prljavog dima, vazduha sa ne abrazivnim česticama ,sa maksimalnom temperaturom u standardnoj izvedbi do 80 °C i specijalnoj do 150 °C (AT model).

KONSTRUKCIJA :

- Kućište je izrađeno od čelika , zaštićeno od spoljašnjih utica Epoxy smolom.
- Radno kolo sa unazad zakrivljenim lopaticama je izrađeno od čelika i premazano Epoxy smolom.
- Dostupno samo u izvedbi 4 (sa radnim kolom direktno povezanim na nosač motora).
- Trofazni asinhroni motor u skladu sa IEC34- IEC72 – 89/392 EEC- 89/336 EEC- 73/ 23 EEC standardima,CE kvalifikovan, IP 55 zaštitom klase F . Pogodni su za S1 režim (neprekidan rad pri stalnom opterećenju).

DODATNI DELOVI :

- Odvodni kanal kondenzata
- Suprotan bok ulaznog otvora
- Suprotan bok izlaznog otvora
- Zaštita ulaznog otvora
- Ulazne fleksibilne veze
- Izlazne fleksibilne veze
- Antivibracioni okvir

NA ZAHTEV :

- Model za transport vrelog gasa do temperature maksimalno 300°C. (PV-L / AT)
- Model otporan na koroziju izrađen sa kućištem ,sa ulaznim delom diska i lopaticama od čelika AISI304 (PV- L / INOX-A)

GENERAL DESCRIPTION

The fans of the PV-L series find their principal application in the industrial plants of pneumatic transport, suction and filtering in foundries, cement factories, mines, marble, ceramics and glass factories, furnaces, etc.
They can convey air with non-abrasive particles and dusty smoke with max. temperature of 80°C in standard version, 150°C in AT version (high temperature).

CONSTRUCTION

- Volute in steel sheet, protected against atmospheric agents by epoxy paint.
- Single inlet backward curved wheel with high efficiency, manufactured in epoxy painted steel sheet.
- Available only in execution 4 (with impeller directly coupled to the motor shaft).
- Three-phase asynchronous motor according to IEC34-IEC72 - 89/392 EEC - 89/336 EEC - 73/23 EEC standards, marked CE, IP55, class F. Suitable for S1 service (continuous working at constant load).

ACCESSORIES

- Condensation drain hole.
- Inlet counter-flange.
- Outlet counter-flange.
- Inlet protection guard.
- Inlet flexible connection.
- Outlet flexible connection.
- Antivibration mounts.

UPON REQUEST

- High temperature version suitable for conveying hot gases, max 150°C (PV-L/AT).
- Corrosion resistant version, manufactured with casing, inlet side disc and impeller in stainless steel AISI304 (PV-L/INOX-A).

UGLOVI ISPUŠTANJA / DISCHARGE ANGLES

PV-L

Rotacija Rotation RD								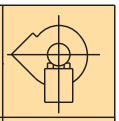
Forma-Form	0	45	90	135	180(*)	225(*)	270	315
Rotacija Rotation LG								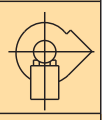
Visina-Height	E1				E2		E3	

N.B. Standardna orijentacija LG270°/Standard orientation LG270°
(*) Zahteva specijalnu konstrukciju/Request special construction

Frekvencija 50 Hz - Temperatura vazduha 15°C – Barometarski pritisak760 mm Hg – Specifična težina vazduha1,22 Kg/m3
Frequency 50Hz – Air temperature 15°C – Barometric pressure 760 mm Hg – Air specific weight 1,22 Kg/m3

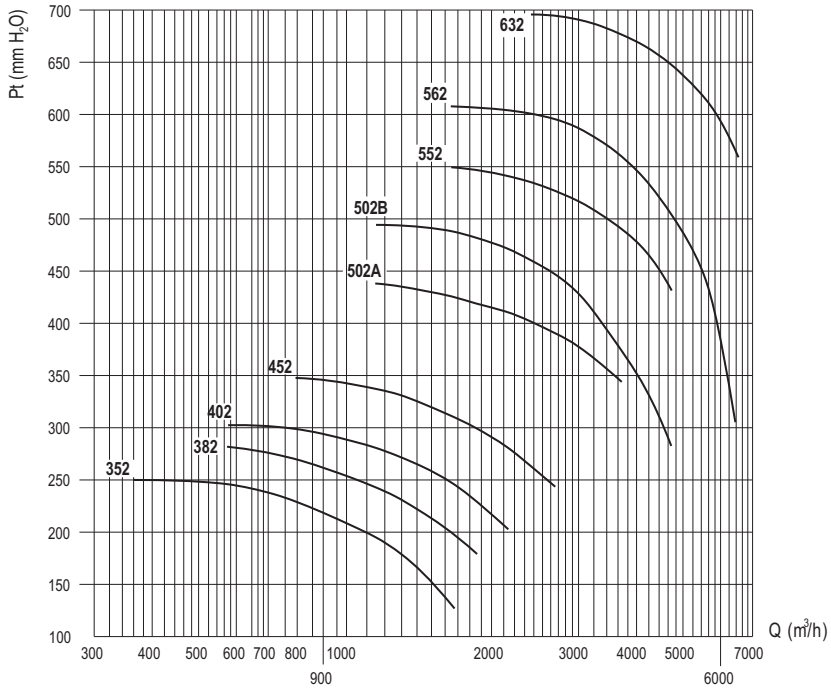

PV-L 352

Tip Type	Model Model	U	P	Pm (kW)	In max (A)	IP/CL	Lp dB(A)
PV-L	352	T	2	1,1	2,80	55/F	70

OPERATIVNI LIMIT / OPERATIONAL LIMITS

Tip Type	Model Model	Q max (m^3/h)	C max (m/s)	S (m^2)	Pd^2 (Kgm^2)	Mot. (Gr)
PV-L	352	1656	46	0,01	0,34	80

PV-L 382

Tip Type	Model Model	U	P	Pm (kW)	In max (A)	IP/CL	Lp dB(A)
PV-L	382	T	2	1,5	3,4	55/F	74

OPERATIVNI LIMIT / OPERATIONAL LIMITS

Tip Type	Model Model	Q max (m^3/h)	C max (m/s)	S (m^2)	Pd^2 (Kgm^2)	Mot. (Gr)
PV-L	382	2142	31,0	0,019	0,7	90

PV-L 402

Tip Type	Model Model	U	P	Pm (kW)	In max (A)	IP/CL	Lp dB(A)
PV-L	402	T	2	2,2	5,1	55/F	75

OPERATIVNI LIMIT / OPERATIONAL LIMITS

Tip Type	Model Model	Q max (m^3/h)	C max (m/s)	S (m^2)	Pd^2 (Kgm^2)	Mot. (Gr)
PV-L	402	2376	34,2	0,019	0,7	90

PV-L 452

Tip Type	Model Model	U	P	Pm (kW)	In max (A)	IP/CL	Lp dB(A)
PV-L	452	T	2	3	6,0	55/F	76

OPERATIVNI LIMIT / OPERATIONAL LIMITS

Tip Type	Model Model	Q max (m^3/h)	C max (m/s)	S (m^2)	Pd^2 (Kgm^2)	Mot. (Gr)
PV-L	452	2664	30,8	0,024	1,0	100

PV-L 502

Tip Type	Model Model	U	P	Pm (kW)	In max (A)	IP/CL	Lp dB(A)
PV-L	502/A	T	2	4	8,5	55/F	80
PV-L	502/B	T	2	5,5	11	55/F	84

OPERATIVNI LIMIT / OPERATIONAL LIMITS

Tip Type	Model Model	Q max (m^3/h)	C max (m/s)	S (m^2)	Pd^2 (Kgm^2)	Mot. (Gr)
PV-L	502/A	3384	31,3	0,030	1,6	112
PV-L	502/B	4680	43,3	0,030	1,6	132

PV-L 552

Tip Type	Model Model	U	P	Pm (kW)	In max (A)	IP/CL	Lp dB(A)
PV-L	552	T	2	7,5	15,3	55/F	86

OPERATIVNI LIMIT / OPERATIONAL LIMITS

Tip Type	Model Model	Q max (m^3/h)	C max (m/s)	S (m^2)	Pd^2 (Kgm^2)	Mot. (Gr)
PV-L	552	4680	49,4	0,038	2,6	132

PV-L 562

Tip Type	Model Model	U	P	Pm (kW)	In max (A)	IP/CL	Lp dB(A)
PV-L	562	T	2	11	23	55/F	87

OPERATIVNI LIMIT / OPERATIONAL LIMITS

Tip Type	Model Model	Q max (m^3/h)	C max (m/s)	S (m^2)	Pd^2 (Kgm^2)	Mot. (Gr)
PV-L	562	6480	47,3	0,038	67	160

PV-L 632

Tip Type	Model Model	U	P	Pm (kW)	In max (A)	IP/CL	Lp dB(A)
PV-L	632	T	2	15	29,0	55/F	88

OPERATIVNI LIMIT / OPERATIONAL LIMITS

Tip Type	Model Model	Q max (m^3/h)	C max (m/s)	S (m^2)	Pd^2 (Kgm^2)	Mot. (Gr)
PV-L	632	6480	38,3	0,047	4,1	160

Tip/Type	A	B	C	D	E* E1 0°+135°	E2 180°+225°	E3 270°+315°	F	G	H	I	L	d O	kg
PV-L 352	285	250	215	260	355	250	355	65	286	101	121	203	10	36
PV-L 382	310	280	238	283	375	280	375	71	333	118	133	234	10	48
PV-L 402	310	280	238	283	375	280	375	71	333	118	133	234	10	52
PV-L 452	345	300	265	315	400	300	400	78	410	100	197	289	12	63
PV-L 502/A	380	335	297	345	450	335	450	86	418	108	197	289	12	93
PV-L 502/B	380	335	297	345	450	335	450	86	481	118	237	337	12	106
PV-L 552	430	375	337	390	500	375	500	95	492	129	237	337	14	133
PV-L 562	430	375	337	390	500	375	500	95	629	139	237	395	14	141
PV-L 632	485	425	381	440	560	425	560	105	639	149	337	395	14	193

Dimenzije u mm/Dimensions in mm

Važno : pogledati tabelu na str. 43 sez. 6

See discharge angle schedule pag. 43 sez. 6

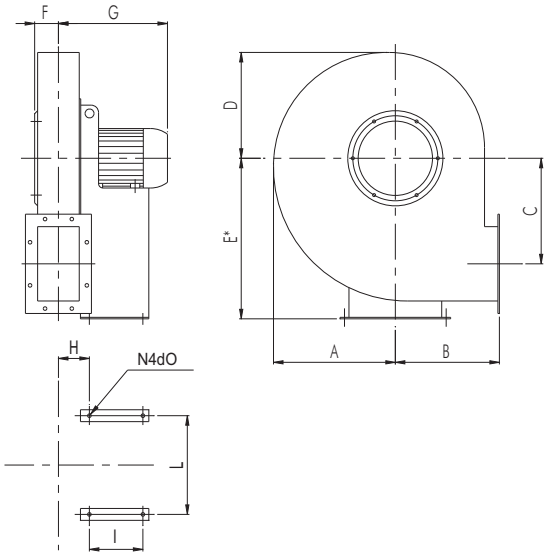

ULAZNI OTVOR / INLET

Tip/Type	dn	di	p	dm
PV-L 352	185	219	8	8
PV-L 382	205	241	8	8
PV-L 402	205	241	8	8
PV-L 452	228	265	8	8
PV-L 502/A	255	292	8	10
PV-L 502/B	255	292	8	10
PV-L 552	285	332	8	10
PV-L 562	285	332	8	10
PV-L 632	320	366	8	10

Dimenzije u mm/Dimensions in mm

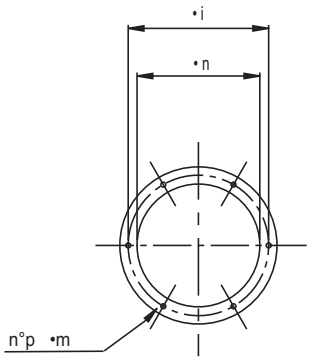

SEK.6

IZLAZNI OTVOR / OUTLET

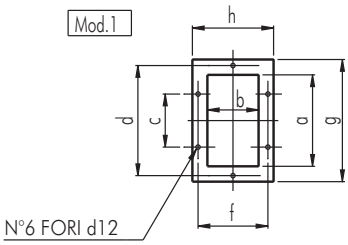

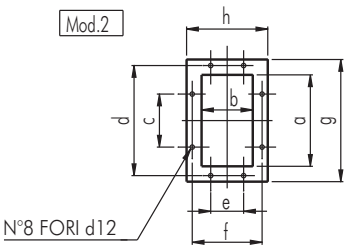

Tip/Type	a	b	c	d	e	f	g	h	Mod.
PV-L352	146	105	112	182	-	139	216	175	1
PV-L 382	166	117	112	200	-	151	236	187	1
PV-L 402	166	117	112	200	-	151	236	187	1
PV-L 452	185	131	112	219	-	165	255	201	1
PV-L 502/A	207	148	112	241	112	182	277	218	2
PV-L 502/B	207	148	112	241	112	182	277	218	2
PV-L 552	231	166	112	265	112	200	301	236	2
PV-L 562	231	166	112	265	112	200	301	236	2
PV-L 632	258	185	112	292	112	219	328	255	3

Dimenzije u mm/Dimensions in mm

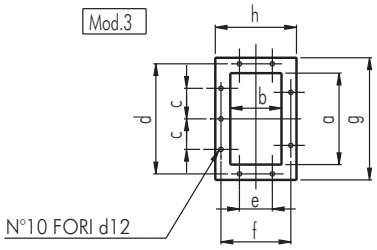

LEGENDA/LEGEND

PS = Statički pritisak (mm/H2O)
PD = Dinamički pritisak (mm/H2O)
Pt = Totalni pritisak (mm/H2O)
Q = Transport vazduha (m3/H2O)
U = Nominalna voltaža (V)
M = Nominalna voltaža i frekvencija mono faze (230 V–50 Hz)
T = Nominalna voltaža i frekvencija tro faze (400 V – 50 Hz)
Rpm = Broj obrataja motora
Pm = Snaga morora (KW)
In = Nominalna apsorbna veličina (A)
IP = Mehanička zaštita motora
CI = Kategorija izolacije motora
S = Spoljašnja površina (m2)
C = Brzina vazduha (m/s)
Pd2 = Inertni moment (Kgm2)
Lp = Nivo pritiska zvuka (dB)
Lw = Nivo jačine zvuka (dB)
Reg. = Regulator brzine
P = n° Polovi
2 pola = 3000 obrtaja
4 pola = 1500 obrtaja
6 pola = 1000 obrtaja
8 pola = 750 obrtaja

Pažnja ! Nivo pritiska zvuka se meri u slobodnom prostoru od 1.5 m razmaka od centra ventilatora , u bilo kom pravcu sa unutrašnjom i spoljašnjom stranom spoljenom na cevni sistem.

Značajno ! Buka samog ventilatora će biti veća , ukoliko se ne meri u slobodnom prostoru.

Ostvarljivi standardi : testiranje karakteristika je vršeno u skladu sa DIN24163 standardom, testiranje akustike je u skladu sa DIN45635T38 standardom.

Ps = Static pressure (mm/H_2O)
Pd = Dynamic pressure (mm/H_2O)
Pt = Total pressure (mm/H_2O)
Q = Air delivery (m^3/h)
U = Rated voltage (V)
M = Rated voltage and frequency single-phase (230V-50Hz)
T = Rated voltage and frequency three-phase (400V-50Hz)
rpm = Nominal motor speed
Pm = Installed motor power (kW)
In = Nominal absorbed current (A)
IP = Motor mechanical protection
CI = Motor Insulation class
S = Outlet area (m^2)
C = Air velocity (m/s)
Pd2 = Impeller inertia moment (Kgm^2)
Lp = Sound pressure level (dB)
Lw = Sound power level (dB)
Reg. = Speed regulator
P = n° Poles
2 poles = 3000 nominal rpm
4 poles = 1500 nominal rpm
6 poles = 1000 nominal rpm
8 poles = 750 nominal rpm

Attention: the sound pressure level is measured in free field at 1,5 m distance from the fan centre, in any direction, with inlet and outlet sides connected to duct.

Note: when selecting it is necessary to keep in mind that the noise of the fan, if not measured in free field, will be higher than the shown values.

Standards achieved: Performance tests according to DIN24163 standard - Acoustic tests according to DIN45635T38 standard

FAKTORI PRETVARANJA / CONVERSION FACTORS

Snaga / Power

	W	kW	CV
W	1	0,001	0,00136
kW	1000	1	1,36
CV	735,5	0,7355	1

Pritisak / Pressure

	Pa	mm/H_2O	in.WG
Pa	1	0,101972	0,00401
mm/H_2O	9,807	1	0,0394
in.WG	249,09	25,4	1

Protok vazduha / Flow rate

	m^3/s	m^3/h	cfm
m^3/s	1	3600	2118,88
m^3/h	0,0002778	1	0,5886
cfm	0,0004719	1,6990	1

KAKO NARUČITI / HOW TO ORDER

Primer / Example:	Tip / Type	Model / Model	Voltaža / Voltage	Ispuštanje / Discharge	Ugao / Angle
	PV-L	452	T	LG	270°